THE

INDIAN FORESTER;

A QUARTERLY MAGAZINE

OF

FORESTRY.

EDITED BY

W. SCHLICH, Ph. D.,
CONSERVATOR OF FORESTS, BENGAL.

VOLUME II.

[*July* 1876 *to April* 1877.]

Calcutta:
PUBLISHED BY THE CALCUTTA CENTRAL PRESS CO.,
5, COUNCIL HOUSE STREET.

1877.

X-143

WEST BENGAL SECRETARIAT LIBRARY

CONTENTS OF VOL. II.

1876-77.

No. 1.—*July* 1876.

I.—Articles, &c.— *Page.*

Forest Conservancy in its Popular Aspect, by B. H. B. P. 1

The Forests and Flora of the Nilgiris by Lieutenant-Colonel Beddome, Conservator of Forests, Madras ... 17

On the Impregnation of Timber, by Dr. Warth ... 28

Technical terms, by Jangali Bulbul 48

Remarks on Mr. Amery's article, "The Special Survey Branch," by Jangali Bulbul 53

Castilloa elastica and the Western Ghaut Forests, by Kad-handi 57

II.—Reviews—

Report on the Forest Administration in the several Provinces under the Government of India, with a Review by the Inspector-General of Forests, 1873-74, by Sw. 64

Transactions of the Scottish Arboricultural Society, Vol. VIII, Part I, edited by John Sadler, F. R. Ph. S., by J. S. G. 74

Remarks on the Review of Mr. Amery's "Notes on Forestry" (Vol. I., page 327), by Kad-handi, Ghati and The Editor 80

III.—Notes and Queries—

A fragment from a German writer on the reasons why the State should manage forests 83

Action of Forests on Retention of Moisture ... 85

Goats in a Forest, by Punjabi 86

The Dye from the "Toon" flower, by B. H. B. P. ... 87

China Blackwood, by B. H. Baden-Powell, Conservator of Forests, Lahore 88

Movements of Pine Leaves, by C. W. Elliott ... 88

On the Killing of Trees, by Kad-handi 89

Re-production of Bamboos by seed, R. C. W. ... 89

The Budget Estimate of the Bombay Presidency for 1876-77, by "A Forest Officer" 90

The Forest School of Dreissigacker in 1815, by Jangali Bulbul 92

Page.

III.—Notes and Queries—(*continued.*)

Effects of grazing on Sal Forests, by W. 93
High Forest and Coppice *versus* Coppice with Standards, by G. G. M. 94
Rats in Nurseries, by E. Sparling 95

V.—Extracts from Official Gazettes and from other Official Publications—

Classified List of Officers in the Forest Department under the Government of India, on 1st April 1876 ... 96
Disposition List of Forest Officers under the Government of India, on the 1st April 1876 104

No. 2.—*October* 1876.

I.—Articles, &c.—

Carson's Hydraulic Motor and its application to Forest Sawmills, by A. Smythies 109
Education of Foresters in Britain, by J. K. ... 116
The cultivation of the Eucalyptus globulus and other Australian gums in India, by J. E. O'Connor ... 120
On the cultivation of the different species of Eucalyptus in Northern India, by D. Brandis, Inspector-General of Forests 136
On a new test of ascertaining the season at which timber has been felled, translated from the French, by E. deDombal 144
The Budget Estimate of the Forest Department for 1876-77 147

II.—Reviews—

Report of the Proceedings of the Forest Conference of 1875, edited by D. Brandis, F. R. S., and A. Smythies, B. A. 152
Report on Gums and Resins, &c., in the India Museum, produced in India, by Dr. M. C. Cook, 1876, reviewed by B. H. Baden-Powell, F. R. S. E. 168
The Ficus elastica in Burmah Proper, or a narrative of my journey in search of it, by G. W. Strettell, reviewed by Sw. 182
The Forests of Victoria (The 1st Annual Report, 1875), reviewed by B. H. B. P. 184
A few Notes on "Suggestions regarding Forest Administration in British Burmah, by D. Brandis, F. R. S., Inspector-General to the Government of India," by Blackthorn 190
Punjab Plantations (Correction of a mistake made in the review of the Report on Forest Administration for 1873-74, Vol. I. No. 1, J. F.), by B. H. Baden-Powell 194

Page.

III.—Notes and Queries—

Acrocarpus fraxinifolius, by Lieutenant-Colonel Beddome 196
Beesha Rheedii, by Lieutenant-Colonel Beddome ... 196
The Forest Department in Madras, by B. H. B. P. ... 198
Contents of Air and Rainwater, from Nature, June 1876 200
Rats, by T. K. 202
On the effects of grazing in Sal forests, by W. R. F. ... 203
On the killing of Trees, by R. W. 206
Budget Headings, by Jangali Bulbul 207
Exchange of seeds, by Lieutenant-Colonel Beddome ... 208
Kurz's Burma Flora and other books, by Enquirer ... 208
On Mr. Amery's paper "The Special Survey Branch," by Jangali Bulbul 209
Kad Handi's paper on "Castilloa elastica and the Western Ghaut Forests," page 57 of Vol. II, No. 1 of I. F., by Plateau... 210
Copse and Coppice, by B. H. B. P. 211
Jangali Bulbul's paper on "Technical Terms" at page 48 of I. F. for July 1876, by Indoctus 212
Technical Terms, by Jangali Bulbul 213

IV.—Shikar and Travel—

Forest Travel in Canada 214
Strange behaviour of a tiger, from "The Field" ... 215
"The Gentle Bheel," A Conference Poem ... 218

V.—Extracts from Official Gazettes and from other Official Publications—

Promotions, Transfers, &c. 220
Disposition List of Forest Officers in India ... 232

No. 3.—*January* 1877.

I.—Articles, &c.—

Note on the Demarcation of the Forest Area in Districts containing Hill or Mountain Ranges, by B. H. Baden-Powell, F.R.S.E., M.R.A.S., Conservator of Forests, Punjab 239
Supply and Demand in their relation to Working Plans by Hubertus 266
Subordinate Forest Establishment, by C. F. Elliott ... 267
Memorandum on Jungle Fires, by M. J. Slyfe, Deputy Conservator of Forests, Salween Division British Burmah 270
The Political Value of Forest Conservancy, by B. H. B. P. 280

Page.

II.—Reviews, &c.—

Report on the Oil Seeds and Oils in the Indian Museum, produced in India, by Dr. M. C. Cooke, 1876, reviewed by B. H. B. P. 288

Lac.—Production, Manufacture and Trade, by J. E. O'Connor, reviewed by Z. 292

M. de la Grye on Forests in Roumania, by B. H. B. P. 297

III.—Notes and Queries—

Forest Management in Madras 308

Forest Management in Madras Again 310

Memo. on the Conservative Treatment of Forest of Bambusa Brandisii, by A. C. F. 311

Vitality of Teak, by Muhafiz-i-Jangal 313

Rats in Nurseries, by G. A. Hight 314

Sowing Teak Seed, by J. B. 318

Rough Timber Tramway, by D. 319

China Blackwood, by E. Mc A. M. 321

Plantation of Eucalypti, by G. Foster 322

Amber 325

India Rubber, by E. H. B. 326

Distribution of Conference Reports, by W. R. F. ... 327

Errata 327

IV.—Shikar and Travel—

Dangers of German Forest Officers, by Hubertus ... 328

V.—Extracts from Official Gazettes—

Promotions, Transfers, &c. 332

No. 4.—*April* 1877.

I.—Articles, &c.—

A Study on the Reboisement of Denuded Slopes, and the Preventitive Treatment of Torrent Areas, by B. H. Baden-Powell, F.R.S.E. 349

Fungoid Diseases of Forest Trees, by M. C. Cooke, M.A., LL.D. 380

A River Officer's Journal in the Jhilum, by F. O. LeMarchand 387

II.—Reviews, &c.—

Report on the Forest Administration in the several Provinces under the Government of India, with a Review by the Inspector-General of Forests, 1874-75, reviewed by Sw. 395

The Pine Forests of Revenna 405

Report on Gums, by M. C. Cooke, etc. 406

A Catalogue of Indian Birds, by B. B. Sharpe, reviewed by Jungali Bulbul. 409

Page.

III.—Notes and Queries—

The Dalbergia latifolia, does it produce Suckers? By E. E. Fernandez 412
The amount of Water in Trees—Extracts from "Nature" 415
Extract from the "Indian Agriculturist" 416
Education of Forest Officers, by M. K. M. B. ... 417
Jhooming in Russia, by Muhafiz-i-jungal 418
Subordinate Establishment, by E. H. B. 419
Floating of Logs, by J. K. 421
Rats in Nurseries, by F. O. LeMarchand 422
Box-wood from Persia—Extract from the "Timber Trade's Journal" 423
The Forest of Dean, &c., &c. 423
The Forest Conference Report, by J. B. 426
Cinchona Febrifuge, or mixed Cinchona Alkaloid ... 427
List of Reports and Publications for sale in the Office of the Superintendent of Government Printing, Calcutta 430

V.—Extracts from Official Gazettes 435

BENGAL SECRETARIAT LIBRARY
2458

INDIAN FORESTER.

Vol. II.] JULY, 1876. [No. 1.

Forest Conservancy in its Popular Aspect.

It has often been observed that all new truth must first pass through the crucible of contradiction, doubt and even ridicule, before it issues into the realms of settled conviction.

Almost every branch of science in which great discoveries have been made, has passed through such an ordeal. Franklin was almost persecuted for his electrical discoveries. Harvey was long ridiculed for maintaining the circulation of the blood; and it would not be difficult to devote several pages in illustration of a host of similar cases. When however the maintenance of old error is bound up with the profit or convenience of a large section of the community, then is the effort to establish the truth, and get it acted upon *as* truth, indeed difficult.

The truths taught by Forest Science, unfortunately for progress, are involved in more than usual difficulties in the way of their acceptance.

In the first place, they are hardly evolvable from abstract considerations of vegetable physiology, chemistry, or atmospheric law. No body has ever realized *a priori* from a knowledge of such subjects only, that forests would exercise a preservative effect on soil, climate and water supply: the fact has only slowly worked its way into the convictions of a small section of society, by repeated observations of the results of forest destruction. And as nature suffers long and tries hard to combat the mischief, of course the evil only becomes rampant after a long struggle. During the progress of the evil it is not difficult to find large numbers of persons eagerly declaring that there is no evil at all. Every one who has read official papers in Burmah and other provinces, will call to mind how persistently some people denied the injury caused by forest fires, on the

ground that the fires always had been (this by the way is a most gratuitous assumption) and that there were flourishing forests notwithstanding.

It is probable that the progress of knowledge has driven out this idea to a great extent in India; but there are here and there some few who still argue for forest fires, just as in England some eccentric individual occasionally questions the fact that the earth is round, and makes strange bets, about observing the hull and masts of a barge approaching from the horizon line of a long straight canal, and so forth.

Just therefore in proportion as the true facts of the case are elicited by a careful and lengthened course of comparative observation, and cannot be put to the test of a few decisive and immediately crucial experiments, so does a conviction of the facts slowly establish itself. Nor is this all: it will usually be observed that even after people have ceased to venture openly to contradict the established conclusion, they nevertheless nourish a silent and half-smothered distrust, which results in their being very apathetic, coldly negative, and very easily persuaded to inactivity, in regard to the subject. Thus when the project of reboisement of the department of the Hautes Alpes and elsewhere, in 1860, first became generally accepted, it was so with a considerable amount of tacit doubt; so that immediately there was a little financial pressure, the expenditure on these works was at once reduced or stopped wholly: whereas if there had been a thorough and hearty conviction on the subject in the public mind, such a course would not have been thought of.

But then another and still greater difficulty presents itself;—there are an immense number of people who are at once totally ignorant of the real extent of the mischief done by non-conservation of forests, and intensely interested (as regards their immediate interest, beyond which they are unable to look) in doing it.

It is almost impossible to force on such people the conviction of the truths of forest science.

It will then be interesting to observe the effect which the general ignorance of the truths of forest economy, or their partial and feeble recognition, has on both rulers and ruled in this country. Both have their prejudices and belief, tacit or expressed, on the

subject of forests; both have also their interests or wishes which modify their action in the matter.

First as regards the people.

They are ignorant as we have seen of the practical truths established by forest science, the more so as they are blinded by a short-sighted idea of their own immediate interest. *All forest conservancy is therefore necessarily disliked.*

It is not to be supposed for one moment that the people at large are less hostile to forest conservancy in Europe, than they are in India.

It is true that in Europe the forest régime is usually attended with remarkably rigid restrictions regarding hunting, shooting, &c., and these intensify the popular dislike; so that fierce poaching frays and even attempts on the life of officials are not unknown .It is rarely in India that any great unpopularity attends the office of forester in any grade of the service, and attempts at forcible resistance have been very rare. The forest officer has this advantage that if the restrictions imposed by his rules are in themselves just and not really oppressive, they are soon accepted patiently as a part of the "dastur" or custom of the times, unless discontent is fostered, as it occasionally has been, by indiscreet official action.

But then the restriction is never liked at first: Even if it is, such an obvious matter as prohibiting barking trees, cutting slabs and torches from living pines, removing the "*humus*" soil from the forest, the restriction is not *popular;* and hence it is idle to speak of "carrying the people with us in our efforts to conserve," such phrases are mere folly. All that in India we can hope to do is, from a standpoint of necessarily superior knowledge, to ascertain facts, and define our restrictions and the areas within which they are enforced, with strict justice. Supposing, for instance, a village having 500 head of cattle has been accustomed to graze over a vast extent of forest land, without restriction. After considering the sort of ground and its grazing capabilities, and allowing a liberal average per head, the forest officer is satisfied that one-third of the original area is sufficient: is it to be supposed that the people will appreciate his facts however correctly and carefully ascertained? Not in the least.

The *fact of restriction*, reasonable or not, is what the popular mind feels, and this should always be borne in mind, but rarely is, by high officials of all grades, when visiting forest tracts. A number of people present petitions stating with much oriental latitude of expression their misery and the probability of their individual and collective extinction, owing to the pressure of the forest rules. The high authority is filled with a most proper feeling of compassion, and as the realities of forest economy have in many cases penetrated but very slightly to his inner conviction, a general order is issued, which embarrasses the entire administration of the district. Yet prudence would suggest to ask such questions as to what villages do the complainants belong? Are they poor or wealthy? Are they really so situated with regard to the forest that they are dependent in any degree on it, or could they get what they want by the simple trouble of going a mile or two further? Have they no common land of their own?* Are they respectable people or turbulent in regard to disobeying the forest rule generally? In the absence of such *data* for judgment the assumption is apt to be made that the forest rules (perhaps agreed to and sanctioned six months before) are too harsh, and an immediate, usually indefinite and often impracticable relaxation in favor of "*the* zemindars," "*the* villagers," or some such other general class, is directed.

And here I may mention a real cause of unpopularity of forest conservancy: it arises from the fact that the people continue to adhere to their own notion as to the proprietary right in the forest, while the Government declaration on the subject is, and has been for years past, at variance with such notion.

A good instance of this is afforded by the condition of the Rawulpindi and Hazara forests in the Punjab.

The boundary of civil jurisdiction between these districts is a purely arbitrary or technical one. The same tribal population extends over the Murree and Kahuta sub-districts in Rawulpindi as characterizes the adjoining hills of Hazara. The Khanpur forests of the latter district are not separated by any physical division from those in the Pindi district.

* In such cases as proved real, why not make a grant of forest to be common land out and out, or order it to be kept with clumps of trees here and there for grazing ground, instead of inflicting an indefinite burden on the Government Estates?

Yet in Hazara, the State recognized the proprietary right of the communities to the forest as a whole, reserving a right to manage the estates and to take a fixed or fixable share of the proceeds to repay such management. In Rawulpindi, judging from the earliest declarations of right in the rules of 1855-56, the State asserted *its* exclusive right to all *trees*, acknowledging only the rights of the people to grazing, firewood and timber for their own use, to be granted on application on payment of a tax or rate: and a portion of the fund so realized to be paid to the communities (not as any acknowledgment of their proprietary right but) "on condition of their co-operating with the officers of Government in enforcing the rules."

This state of things the people have, notwithstanding 20 years of its currency, never recognized. Long ago the payment of the share was stopped because the condition was not complied with, and the people to this day resent the treatment of occasional trespass on the forest rules for timber, brushwood and other produce, as *crimes*. They consider the forest *theirs*, in spite of the rules to the contrary: they ask how it is that there is one law for Hazara, and another for them? An enquiry into the *real* pre-annexation forest history of some provinces would be fraught with instruction.

But besides the short-sighted self-interest, which prevents ignorant populations from appreciating the necessity for forest conservancy, there is another connected subject to be considered; namely, that the effects of forest destruction do not always tell upon the locality of destruction itself, so much as on the lands at a distance: when this is so, you cannot expect the ignorant people to care about it. I need only instance the effect of mountain inundations in causing torrents, which do indeed furrow the hill sides into deep ravines and cause landslips, &c., but whose worst effects are seen in the vast masses of debris and stones they carry down into the valleys or plains below, de-fertilizing lands, destroying roads and bridges, altering the supply of water and the steady course of streams, and subjecting the inhabitants miles away to the fear of sudden floods, causing the river mouths to be blocked up by 'bars' formed of the detritus

carried down, and their navigability to be injured or destroyed.*

It will take centuries of teaching to diffuse anything like a popular acquaintance with, or recognition of, such considerations. In Europe indeed one great advantage has been obtained. Forest conservancy has been long enough recognized, to enable some important work in the way of plantations and restoration of denuded areas to be carried to completion, the results of which are palpable to the senses.

It is more than doubtful, whether centuries of civilization in Europe have put into the heads of the peasantry anything like a real conviction that a portion of the country ought to be under forest, and ought to be continuously maintained in that condition; but the most ignorant can realize an appeal to the senses: they can feel the difference of temperature, which a reboised tract causes: they cannot help seeing the change whereby what was once an occasionally running torrent, has become a permanent gentle stream, owing palpably to the process of clothing the slopes which surround its source, with foliage. Fortunately there are not wanting in various parts of Europe such ocular and tangible proofs of what forest growth effects.

In India, we have not yet reached so far. Indeed in the absence of a practicable forest law, and with the first years of our departmental existence spent in unrecorded experiments and tentative measures, and blighted by that Procrustean policy, which, without deigning to devote a moment's consideration to the varied condition of the different provinces and the different stages of forest destruction which characterized them, demanded a surplus revenue for each; thereby fixing deep the conviction that money making, not forest improvement, is the forester's road to promotion—with such difficulties, it is hardly to be expected that we should have *much* to show to demonstrate the results of forest conservancy. Something indeed we have; we can show at least in the Central Provinces, the Berars and elsewhere, the benefit of keeping out fire from the forest; and that is not a small thing in a country where the peasantry do not believe at all in damage by fire. Here and there too we have forests

* See Jules Clavé-Etudes sur L'Economie forestière. Paris, 1862, p. 31.

to which perfect rest from grazing has been allowed, and an almost perfect natural restoration been the consequence.

I may here take occasion to remark, that when under the law of reboisement of 1860, the Alpine districts were taken in hand, the forest directors of France wisely ordered that those circles of operation should be selected first which would surely succeed and were in such positions that their success would be notorious to the neighbourhood, being easily visited; it was considered that thus would the public discontent at the restrictions necessary to carry on reboisement works be much allayed, and people would be forced to admit the value of results which they saw with their own eyes.

It has often occurred to us, that we ought to imitate this course. The reboisement for instance of a portion of the range of hills crossing the Jhelum Railway line in the Punjab, and which hundreds and thousands of people would see, would do more good to the cause of forest conservancy, and encourage the official mind to be more courageous and decided in giving its support to forest work, then heaps of the most conclusive reports or the most unquestionably scientific arguments.*

Gradually disarming opposition in this way, we should advance to the only real method of attracting the people of India to forest management, *viz.*, the creation of communal forests —forests which would supply the wants of the community and would in all probability in the course of time put a surplus, not into the hands of individuals to be frittered away, but into a real common fund for the benefit of the village or township.

But it is impossible to pursue this subject here. We must hasten to the other part of the question in hand which relates to the effects produced on forest conservancy by the currency of certain opinions among the ruling authorities.

It is not at all probable that the mass of officials in India have not heard at least of the chief benefits which forest conservancy proposes to confer, and of the terrific evils which forest destruction brings about. Such books, as Mr. Marsh's "Nature as modified by action of man," are generally popular; some few may

* The Conservator of Forests in Bengal was guided by this principle, when drawing up the working plan for the Buxa plain reserve (see A. R. for 1874-75).—*The Editor.*

have read the work of Surell on Alpine torrents* and more still occasional articles on forest subjects in English and French Reviews. The general tone of feeling regarding forest matters is certainly very much altered, from what it was twenty or even ten years ago. Many officers then supported the idea that forest-fires did no harm; few would be found to do so now. Most people admit that all grazing is inimical to the restoration of forests, and that camels are worse than goats, goats worse than sheep, sheep worse than buffaloes (in most cases), and cows least harmful of all.

Yet this was not so always. The district officers in the Central Provinces *did* not, and those in Madras (it is said) do not to this day trouble themselves in the least to stop forest fires: and it is only of late years in the Central Provinces that their really intelligent exertions have stopped "Kumri" cultivation. In Burma district officials are not yet convinced in all cases that this cultivation (there called toung-yá) is a grand evil. Our cattle trespass law, only recently revised, still continues to enforce a fixed and ridiculous scale of fees for cattle pounds without reference to the forest question. We must still however be prepared to expect that (as before remarked) long after the open expression or maintenance of wrong views has ceased, a sort of unexpressed lingering over the old belief and a certain want of vigorous conviction resulting in languid action, will remain.

Just then as in the case of the populace we found a total ignorance of forestal truth, so in the official mind up to the highest, we find various degrees of disinclination towards vigorous conviction: and just as we find in the people the progress of conviction barred by self-interest, so is it with their rulers. Considerations of interest, such as the desire to have no complaints and to have everything snug and quiet in the district, to shew a good revenue sheet by yielding forest produce to indiscriminate user in return for a popularly low payment and so forth, affect their capacity for the reception of a sure belief in forest economy.

---

* The material of this and many other works on torrents have been made accessible to English readers by Dr. Crombie Brown in a work called "Reboisement in France." (H. S. King and Co., London.) We hope to review this work ere long.

The higher officials are naturally affected by the same feelings in a more generalized form. The district being expanded into the division, and the division into the province, the benefits of contented population, surplus revenue, and the absence of complicated questions of right remain, and of course expand in importance with the area to which they have reference; in other words, they multiply almost in geometrical proportion as we ascend from the smaller sphere to the aggregate;—from district management, to Provincial Government,—to Imperial Policy. Our present position under these conditions is the apparent absence of any definite line of policy with regard to Forest Conservancy. An examination of the higher official utterances will shew a tone varying frequently and very naturally, according to the pressure of the particular interest which the reference of the moment touches; but then the tone varies not unfrequently to the extent of forgetting or even contradicting, principles that ought not to be either forgotten or contradicted, under the pressure of any interests whatever.

Forest Officers not unfrequently find themselves in the position of people bound hand and foot and told to run. At one time surplus revenue is insisted on.* At another the closing of forests and a strictly conservative treatment which in general forests is incompatible with realization of revenue, is directed. Fearful of consequences, Forest Officers prefer positively to disobey the instructions, departmentally given, to close forests. In a large district of the Punjab, the clothing of a kind of brushwood (a small species of *Zizyphus*) locally called "Mallá" is of first rate importance in regenerating the scantily clothed fuel forests; yet in "rakhs" (as they are called) ordered to be *closed* for reproduction, this material was, year after year, allowed to be cut and sold! The officer in charge considered that he *could only* understand the order for closing so far as to be compatible with the order to make revenue.

At another time the absolute duty of the forester to show a visible improvement in the condition of the Crown Estates entrusted to his charge is urged; but should he commence to act

* It is remarkable, that no one has ventured to deal with the resolution of the Conference of 1873-74 on Finance! It seems to us that this is so because the arguments are unanswerable: if so, why not acknowledge it and act on them.

upon this, he is told that his instructions must in no wise interfere with *any one;* and that a happy population is to be regarded as of far higher consequence than flourishing forests.

The conservation of forests in short is usually agreed to and rules proclaimed without difficulty; but to put those schemes into effective operation becomes a matter of the utmost difficulty in case any objection is made in the course of the work: and of course objection *always will be* made (if listened to,) because, as already pointed out, ignorant people do not really know in the least whether they have got enough or *not;* all they regard is the fact that *they are* restricted to some extent by conservancy rules, and that they do not like it.

Another point here deserves notice. The chief feature of all Indian administration, especially in districts, divisions and departments, is its intensely idiosyncratic character. In some respects, and especially in the earlier days of settled Government, this feature is one of immense value; but as surely as it is not gradually supplemented (not displaced) by adherence to a definite policy from above, (thereby leaving the individual will and ability free to work *within* a prescribed boundary, but not to define that boundary for itself,) so surely does it become a danger. In forest matters it is so very greatly. Changes in the administration of districts are of course unavoidable; but each new comer has some new view as to how far the forest regime in his district is good either in principle or practice; and he sets to work accordingly, no defined policy from above restraining him. We shall not give names, but may allude here to a case of this kind in an important province, where in one district the forests had just been settled by a most competent and experienced settlement officer, where they had been thoroughly surveyed and mapped, where rules drawn up after the most exhaustive consideration had been sanctioned, and yet where the whole administration of those carefully provided for forests has been thrown into absolute confusion, apparently owing solely to the individual views of one particular officer who happened to come, in the course of administrative transfers, to the district charge.

Leaving however those general observations, we shall proceed to notice one very remarkable effect which has been produced on our forest area, and the principles on which it is treated, by the prevalence of certain (mistaken) views in by-gone days. The illustration relates to the Punjab. In nearly all the early settlements, or wherever in other ways the Government right to interfere with forest matters came up for determination, one prevailing notion will be found to underlie the orders of settlemen tand district officials; that notion was that it was practically sufficient to assert the right of the state to *all standing or growing trees:* so the grazing was to be unrestricted, and everything else, provided only the individual standing stock was not touched without a permit: in a few instances it seems to have struck the officer that reproduction might be necessary at some time, and a clause about closing one-third of the forest (which was rarely or never acted on at least effectually) was inserted.

Now this notion is based on a total disregard for the climatic use of forests, and on that radical misconception that the individual trees constitute the forest, instead of the important fact, that a forest is *one* whole, its atmosphere, its trees, its undergrowth, and its soil, being component members of it. The first consequence of such a notion has been to establish the selection-method (jardinage) of felling, in its worst form, everywhere without respect to its being adapted to the locality or not; so that all "aménagements" made have to be designed on the principle of conversion of an ill-used forest into one worked for natural reproduction.

The second consequence has been that, as the standing stock has disappeared by user, or by old age, nothing has replaced it, except in some few places, which happened to be naturally protected from the feet and mouths of cattle: in other places powerful nature has struggled to send up some vegetation, which goats have immediately browsed down into little hard mushroom-shaped lumps; then we are told triumphantly by the district officer that such and such a place is quite unworthy to be taken over by the forest department, it only produces a certain miserable stunted growth, and is of no other use but to afford grazing!

Let any person examine the curious hills known as the Salt range in the Punjab; the benefit to the plain lands below, if the mountain torrents were stayed and the slopes above the cultivation wooded, are simply incalculable. Yet the history of those hillsides is that they are doomed. Claimed as *private property* by contesting powerful tribes of Awans and others at settlement, the settlement officer, with a bold dash of policy, said "No; we are not going to have this sort of thing; no one shall have them: let the tracts be marked off, respect the standing trees, and you shall come in to graze as you like: moreover as there is lots of room for others besides you, we will let the public in with their flocks, provided they pay." The present denuded state of the hills is the natural and inevitable consequence; moreover the indiscriminate opening of vast areas of grazing ground, and the comparative difficulties of agriculture, rendered greater and greater as forest destruction progressed, tended to establish a pastoral rather than an agricutural regime, the former being of course the most detrimental to forest estates. Now that the hideous evil has become apparent, we are immediately brought face to face with the almost insurmountable difficulty of the case.

If it were merely the climatic conditions (which by forest officers are seen to be more important) of the Salt range, we should despair of making any impression on the higher official mind, until further years of writing, local demonstration of increasing torrents, and destruction of culturable lands, slowly brought the vivid conviction that we now entertain. But fortunately a large demand for fuel has arisen. How are we to meet it? The standing trees, the only declared right of the state, being cut down, the land is no longer available for forest treatment. But reproduction we must have, and consequently we are in a state of uncertainty, the Government urging us to take vigorous action, the authorities refusing to allow grazing to be stopped, and writing about petty questions as to who is to give permits to cut pennyworths of brushwood, while the real difficulty is not attempted to be solved.

The consequence of this initial misconception will necessitate the re-settlement of a large portion of the forest area

in the Punjab before any steps can be taken at all for the improvement and reboisement of the tracts.

Fortunately among the *Pinus longifolia* forests of Kangra, it was found possible by agreement with the people to get possession of certain forests; but there the pastoral difficulties were less, and in all probability the climatic influence of the forest much less, than on the higher ranges.

But while this peculiar notion of declaring only the standing trees the property of Government, may be confined to the Punjab, a conception of far wider extent has grown up in this shape that all forests should be classified unto "Reserved" and "Unreserved" forest. On this principle it was the duty of the forest department to select the very best forests and keep them as reserves free of all rights, &c., if possible; the rest was then designed to go either into one general class or into two somewhat similiar classes. If one, it is generally called a "district forest," which means forest that is given up to the villagers to do what they like with, subject to some very general restrictions, and which however in some places (*i.e.*, Central Provinces) are not altogether inefficient. When there are two classes, we have (1) "unreserved" and (2) "shâmilat," or guzara land; in which case the "unreserved" means a class of forest which is open to the exercise of rights, but still is to some extent under rules, and the State derives revenue for grazing, minor produce, and sales of timber and fuel. The "shâmilat, guzara land" or "village forest," means land given over to the communities to do what they like with, partition and clearing for cultivation even, being not disallowed.*

Now to a certain extent this division is perfectly just. It is quite right that we should obtain complete control over a portion of the forest rather than an incomplete control over the whole. It is quite right that as regards the production of timber, fuel, or any other commodity specifically, such as rubber, lac, bark, &c., &c., we should be able to take the produce from compact and fully productive areas, rather than glean them from an enormous extent of

* The evil of this has just been recognised in certain of the forests of Rawalpindee District in the Punjab.

sparsely productive land. It is also desirable for the comfort of people that the obnoxious regulations should be confined to as small a space as possible: but here the correctness of the notion stops. If it were known with any thing like reliable accuracy, what are the requirements (1) of internal consumption, (2) of trade and external consumption, (3) of the climate as regards the preservation of the water supply, suppression of torrents, land-slips avalanches, &c., and if it were known that the "reserved" area alone was sufficient for the actual and prospective wants of the country:* it would then be a matter of course that the whole of the balance of forest land might be cleared off. But these facts are not ascertained yet; nevertheless the officials seem to regard the classification of forests effected as something final, instead of tentative. They look with satisfaction on the idea that there is a large area of unreserve, and are not aware, that the system of unreserve management is not one calculated to maintain the forest as such, but only to *retard the process of destruction* in those lands; the destruction nevertheless is gradually (and not always very gradually) going on. When shall we wake up to this fact, and commence to ascertain the statistical data necessary?

Whenever a demarcation of forest is attempted, it is invariably assumed that the interest of the grazing population directly affected by the forest regime is of greater importance than the forest interest. Such sentences as the following may frequently be read: "A happy and contented people is better than flourishing forests." That means that the content of the people locally affected, is better than a good state of forest. But if authorities really believed that the maintenance of a proper balance between forest land and culturable and pasture land was an essential economic truth, they would see that the proposition would be converted into this—"the content of people *locally affected* by forest reservation, is better than the welfare of the whole population whose condition is affected by the maintenance of the forest, whose land is saved for being eroded and dissected by ravines, whose water supply in streams is secured, whose

* Assuming, of course, that the reserved area was maintained in a condition of continuous and even increasing productiveness.

public roads and bridges are saved from being carried away by impetuous torrents coming down from denuded hillsides and so forth"—which is absurd. When there is a tendency to the *pastoral* regime in hills which ought to be wooded, the action of authority ought directly to discourage it or to divide the hill into such sections as would secure the forest interest *first*.

Instead of this we *always* assume the necessity of grazing and give up to forest whatever is left. Why should the pastoral interest be the first? The answer simply is, because the popular mind does not believe in or recognize, the value of forest in hills as benefitting the whole country below; therefore the immediate tangible interest of a small section of the community is preferred to the larger and unrealized interest.

Nature has laid down distribution of land for us which we would do well to study.

The mountains are clothed with wood: the tops above tree vegetation being open to grazing for the summer months: below that should follow belts of forest taking in the sources of supply of streams and nullahs. Below that again, we may have grazing and cultivation. Then come the lower hills to be occupied with sál forest, mixed forest, or *Pinus longifolia* forest according to the climatic position, and then we have culturable valleys and plains through which forests and grazing land have to be distributed chiefly according to local and export demands and less for climatic considerations: for in India (speaking very generally) forests in the plains have little more climatic effect than cultivation. Of course I do not go into such detail as to consider the desirability of planting islands in rivers, embankments, and so forth. I speak only of the broad distribution of land, which nature points out.

I do not also allude to any of the doubtful or unknown effects of forest, such as the increase of rainfall, but simply to those wellknown, and ascertained as surely as any scientific facts on earth;—the preservation of the soil on hills, the prevention of torrents, the regulation of the course of rivers, the preservation of a steady water-supply. Look at our Punjab lands with abandoned cultivation and beds of long dried up

streams, traceable to the outer Himalayan ridges; look at our great roads to Simla and elsewhere, the thousands spent annually on repairs on account of torrents which wash away the bridges, and landslips which destroy the roadway! Or look at the same thing even under the tropical verdure of the Eastern Himalaya below Darjeeling.

Yet all this is due to neglect of forests springing from unbelief in, or popular mistaken notions regarding, the natural place and use of forests.

I cannot here touch on the subject of agriculture, but the love of interspersing the forest with tracts either temporarily cleared for cultivation, or patches permanently brought under pick and plough, is due to the inveterate habit of the people preferring to get a small produce off an extended area of cultivation, than, by a system of farming, manuring and rotation of crops, to make a compact area yield the same or a larger return.

But our officials think it dreadful to put a stop to cultivation of hill tracts: whereas their steady action in the other direction would compel people gradually to the right action; this would then affect the area capable of yielding grass and fodder for cattle and so lessen the demand for grazing land in the forests. Is it premature then to collect statistics? We have a census of population; let us collect data of consumption of timber, small building wood, fuel, and brush wood per house; let us ascertain the number of cattle, the grass yield of our waste land and grazing grounds, and the quantity of land really needed for the yield of such grazing. We are allowing hill lands to be burned and cleared for cultivation without any one examining to see whether the land lies at a suitable angle of slope, or whether its clearance on other grounds is wise. In short, at present we are working with our "Reserve" and "Unreserve" in almost *Cimerian* darkness.

B. H. B. P.

The Forests and Flora of the Nilgiris.

By Lieut.-Col. Beddome,
Conservator of Forests, Madras.

The Nilgiri mountains, rising to upwards of 8,000 feet and having a rainfall of less than 40 inches on some of the driest parts of the eastern side, and 300 inches on the moistest parts of the western slopes, possess, as might be expected, a very varied and interesting flora exceedingly numerous in genera and species. With the exception of the dense evergreen moist forests on the western slopes, the whole area has been well explored by Botanists, and it is probable that there are no plants now botanically unknown on the plateau and the deciduous forests of the slopes; but this cannot be said of the heavy moist forests of the western slopes; they are of immense extent, very difficult to get at and very feverish at the lower elevations, and as there are no habitations, inhabitants or supplies of any sort the visits of Botanists, who have often been attracted to them, have been generally of a flying nature. The trees in these tracts attain an immense size, 200 to 250 feet in height, and it is of course no easy matter to obtain their flowers, and there can be no doubt that there are still a good many undescribed species awaiting the Botanist; some flower in the cold season, some in the hot season and some in the rains, some few are in flower all the year round, but it is believed that the majority flower between February and the middle of May, which is the most unhealthy time of the year. The shrubs, creepers and herbaceous plants in these tracts are pretty wellknown, but a careful search at any season of the year would undoubtedly be rewarded by some novelties.

Botanically we may divide these hills into 4 tracts, each having its own flora, very few species of which encroach upon the other tracts.

1.—*The Deciduous Forests of the Slopes.*

These are of much the same character as the dry forests of the lesser hills and plains of the Presidency; the trees are all more or less deciduous in the dry months of January, February, and March, but the forests are never entirely bare, like the woods

and forests in Europe in the winter. Many trees, such as the Erythrinas, Butea frondosa, the 3 Dalbergias, Schleichera, Bignonia xylocarpa, Odina Wodier, Terminalia belerica and others burst into flower in February, and leaf themselves rapidly afterwards, before many other trees have finished shedding their leaves, but still these tracts have a very forlorn appearance at this season and fire often sweeps through them greatly to the disgust of the forester. In these tracts a very great proportion of the tropical trees of the presidency are to be met with, and about the lowest portions very many of the tropical shrubs and weeds, which do not belong at all to our Alpine flora, such as the weeds amongst Capparids, the small milk worts (Polygalas), the herbs and shrubs of Malvaceæ, the Grewias and herbs of Tiliaceæ, Zizyphus several species, Vitis many species, Cardiospermum, Leguminous weeds and herbs, most of the Cucurbitaceæ, many of the Compositæ, Convolvulaceæ, Scrophulariaceæ, Amarantaceæ, Commelynaceæ, and a large proportion of the sedges and grasses.

The trees most characteristic of those tracts are the following :—

Dillenia pentagyna.
Cochlospermum gossypium.
Kydia calycina.
Bombax Malabaricum.
Sterculia fœtida.
Eriolœna Hookeriana.
Boswellia serrata.
Garuga pinnata.
Cedrela Toona.
Chloroxylon swietenia.
Elœodendron glaucum.
Schleichera trijuga.
Buchanania latifolia.
Mundulea suberosa.
Butea frondosa.
Dalbergia latifolia and paniculata.
Pterocarpus marsupium.
Hardwickia binata.

Xylia dolabriformis.
Acacia many species.
Albizzia odoratissima and amara.
Terminalia tomentosa, paniculata, belerica and chebula.
Anogeissus latifolius.
Careya arborea.
Lagerstrœmia microcarpa and reginæ.
Adina cordifolia.
Stephegyne parvifolia.
Bignonia xylocarpa.
Tectona grandis.
Gmelina arborea.
Phyllanthus emblica.
Sponia Wightii.
Bambusa arundinacea. } Bamboos.
Dendrocalamus strictus. }

These tracts yield many of the most valuable timbers of the Presidency, of which the following may be said to be the most important:—

Cedrela Toona (White Cedar.)
Chloroxylon Swietenia (the Satin-wood.)
Schleichera trijuga (Puva.)
Dalbergia latifolia (the Black-wood or Rose-wood.)
Pterocarpus marsupium (Vengay.)
Hardwickia binata (Achà.)
Xylia dolabriformis (Irul.)
Albizzia odoratissima (Karangalli.)
Terminalia tomentosa (Matti.)
Lagerstrœmia microcarpa (Ventek.)
Tectona grandis (Teak.)
Gmelina arborea.
Phyllanthus emblica (Nelli.)
Santalum album (Sandal-wood.)

2.—*The Moist Evergreen Forests of the Slopes.*

These are grandest on the western slopes and between 3,000 and 4,000 feet elevation, where the trees often attain 200 and

250 feet in height; they are all evergreen and the great variety of foliage and color render them exceedingly beautiful, some of the young leaves coming out pure white, others a bright crimson, others all possible tints of brown, yellow, red and green. These tracts are exceedingly moist from the first showers in March till the end of December, and during that season abound with leeches. The trees are often covered with epiphytic orchids, ferns, mosses, balsams, and there is a glorious profusion of rattans, tree ferns, climbing ferns, and fine creepers, but what may be said to be most characteristic of these forests is the genus Strobilanthes (Acanthaceæ), large shrubs which form the principal underwood and of which 29 species are found on these hills. Some of these flower every year, others however only after a growth of 6 or 7 years, when they die down and renew themselves from seed; they almost all have showy flowers, and many are very beautiful. The 2 palms Caryotaurens and Arenga Wightii are very conspicuous in these tracts, also several species of rattan, (Calamus), and 2 very fine reed-bamboos, Oxytenanthera Thwaitesii (Munro) and Teinostachyum Wightii (a very handsome broad-leaved species described by Munro as a Bambusa from specimens only in leaf.) Ferns are in great profusion including several tree ferns, amongst which the Alsophila crinita (not yet introduced into English hot-houses) is unmatched in any country; very beautiful Sonerilas and Balsams are also in profusion. Guttiferœ, Rubiaceæ and Euphorbiaceœ are the orders perhaps most copiously represented (next to Acanthaceœ) the first by trees, the 2 latter by shrubs and trees.

Above 4,000 feet these forests begin to decrease in size, and towards the plateau they gradually pass into what will be treated of as *the sholas.*

The following is a list of the trees most characteristic of these forests:—

Polyalthia coffeoides.
Garcinia cambogia and Morella.
Calophyllum tomentosum.
Mesua speciosa and Coromandelina.
Pœciloneuron Indicum.
Dipterocarpus turbinatus?

Hopea parviflora and Malabarica.
Vateria Indica.
Cullenia exceloa.
Leptonychia moaccuroides.
Chickrassia tabularis.
Canarium strictum.
Aglaia Roxburghiana.
Beddomea Indica and simplicifolia.
Gomphandra axillaris and polymorpha.
Enonymus Indicus and angulatus.
Lophopetalum Wightianum.
Harpullia cupanoides.
Acrocarpus fraxinifolius.
Humboldtia Brunonis and Vahliana.
Saprosma fragrans, Wightii and glomerata.
Bassia elliptica.
Pajanelia Rheedii.
Myristica laurifolia and corticosa.
Alsceodaphne semicarpifolia.
Actinodaphne salicina.
Cryptocarya Wightiana.
Actephila excelsa.
Sarcoclinium longifolium.
Agrostistachys Indica.
Baccaurea sapida.
Ostodes Zeylanica.
Cephalocroton Indicum.
Bischoffia Javanica.
Hemicyclia venusta.
Artocarpus hirsutus.
Gironniera reticulata.
Laportea crenulata.

The timbers as a rule are not of such good quality as those in the deciduous forests, but there are valuable timbers of which the following are the chief :—

Calophyllum tomentosum (Poon spar.)
Mesua 2 species (Iron-wood.)
Hopea parviflora. (Kiral boghi.)

WEST BENGAL SECRETARIAT LIBRARY

Hopea Malabarica. (Kiral boghi.)
Chickrassia tabularis (Chittagong wood.)
Acrocarpus fraxinifolius (Red Cedar, or Shingle Tree.)
Diospyros Ebenum (Ebony.)
Artocarpus hirsutus (Angelli or Ayni.)
Gironniera reticulata (Kho mangee.)

These moist forests never reach quite down to the plains anywhere round the Nilgiris, though they do so in parts of South Canara, Coorg and Travancore; they always give way, at 1,000 or more feet from the base, to deciduous forest or tracts composed of nothing but reed-bamboos (Teinostachyum Wightii.)

3.—*The Sholas or Woods of the Plateau.*

These are very similar in character to the moist evergreen forests of the slopes, but being at a higher elevation, the trees are of different genera and species, and their growth is much smaller, 80 feet being much beyond the average height; they are all evergreen, and the tints, from the new growth at certain seasons, very beautiful.

Myrtaceæ, Lauraceæ and Styraceæ are the orders most represented by trees, and the undergrowth is chiefly composed of Rubiaceous shrubs and Strobilanthes (Acanthaceæ.)

The following are the principal trees growing in these sholas :—

Michelia Nilagirica.
Hydnocarpus alpina.
Gordonia obtusa.
Elæocarpus oblongus-taberculatus and ferrugineus.
Melicope Indica.
Heynea trijuga.
Gomphandra axillaris.
Apodytes Benthamiana.
Ilex Wightiana and denticulata.
Enonymous crenulatus.
Microtropis ramiflora and densiflora.
Turpinia pomifera.
Meliosma Arnoltiana and pungens.
Photinea Notoniana and Lindleyana.

Eugenia, many species.
Pentapanax Leschenaultii.
Polyscias acuminata.
Heptapleurum rucemosum, rostratum, obovatum and venulosum.
Viburnum punctatum, erubescens, hebanthum and coriaceum.
Vaccinium Leschenaultii and Neilgherrense.
Sapota elengioides.
Symplocos, many species.
Lasiosiphon eriocephalus.
Machilus macrantha.
Phœbe Wightii.
Cinnamomum Zeylanicum var Wightii.
Tetranthera Wightiana.
Litsœa Zeylanica.
Glochidion, several species.

The timbers are of much less value than in either of the other tracts; the following are those chiefly in use :—

Hydnocarpus alpina.
Gordonia obtusa.
Ternstrœmia Japonica.
Elœocarpus oblongus.
Ilex Wightiana.
Eugenia several species.
Enonymus crenulatus.

Ferns and mosses abound amongst the former. Alsophila latebrosa, a tree fern, is abundant. Orchids are very poorly represented. There is one species of reed bamboo (Arundinaria Wightiana) and some shrubby Balsams and Begonias, and the following herbaceous plants may be enumerated as very characteristic :—

Desmodium strangulatum.
Crotalaria barbata.
„ fragaria, Indica and elatior.
Sonerila speciosa.
Hydrocotyle Javanica.
Sanicula Europœa

Senecio corymbosus.
Chrysogonum heterophyllum.
„ Halenia Perottetii.
Pogostemon rotundatus.
„ speciosus.
Gerardinia Leschenaultii.
Elatostema diversifolia.
„ sessile.
Pilea Wightii.
Chamabainia cuspidata.

4.—*The Grass Land of the Plateau.*

This is covered with many coarse species of grass, which are quite burnt up with the frost and sun in December and January; after the first showers in March the growth is very rapid and numérous herbaceous plants spring up. The following are the most characteristic herbaceous plants:—

Anemone rivalis.
Ranunculus reniformis.
„ diffusus.
„ Wallichianus.
Viola serpens.
Impatiens Beddomei.
„ Chinensis.
„ inconspicua.
„ tomentosa.
Crotalaria formosa.
Indigofera pedicellata.
Flemingia procumbens.
Potentilla Kleiniana.
„ Leschenaultiana.
„ supina.
Drosera Burmanni.
„ Indica.
„ lunata.
Sonerila grandiflora.
Pimpinella Leschenaultii.
Heracleum rigens.
Anaphalis, several species.
Gnaphalium hypoleucum.
„ marcescens.
Senecio several species.
Gentiana pedicellata.
Ophelia corymbosa.
„ minor.
Micromeria biflora.
Prunella vulgaris,
Pedicularis Perottetii.
„ Zeylanica.
Satyrium Nepalense.
„ Wightianum.
Habenaria, many species.
Lilium Wallichianum.
„ Neilgherrense.
Pteris aquilina.
Gleichenia dichotoma.

Trees are only here and there loosely scattered about these tracts; these consist chiefly of Rhododendron arboreum, Salix tetrasperma, Celtis serotina, Pittosporum 2 species, Dodonœa viscosa and Wendlandia Notoniana.

The following are the most characteristic shrubs :—

Berberis Nepalensis.
„ Aristata.
Hypericum Mysorense.
„ Hookerianum.
Eurya Japonica.
Indigofera pulchella.
Desmodium rufescens.
Atylosia Candollei.
Sophora Glauca.
Cassia Timoriensis.
„ tomentosa.
Rubus lasiocarpus.
„ flavus.
„ rugosus.
Rosa Leschenaultiana.
Cotoneaster buxifolia.
Rhodomyrtus tomentosa.
Osbeckia Gardneriana.
Osbeckia Wightiana.
Hedyotis Lawsoniœ.
„ stylosa.
„ articularis.
„ fruticosa.
„ pruinosa,
Lobelia excelsa.
Gualtheria fragrantissima.
Ligustrum Perottetii.
„ robustum.
Jasminum revolutum.
Clerodendron serratum.
Leucas, several species.
Elœagnus latifolia.
Strobilanthes sessilis.
„ sessiloides.
„ kunthianus.

The latter plant is often gregarious and covers several acres in extent, and when out in flower is one sheet of blue, and some people say that it is from this that the Nilgiris or Blue Hills derived their name.

The following may be enumerated as the most beautiful plants found on these hills :—

Fagræa Coromandelina (slopes).
Rhododendron arboreum (plateau).
Ceropegia Decaisneana (Sispara ghât).
„ elegans (Coonoor.)
Exacum Perottetii (Coonoor).
Œginetia pedunculata (northern slopes).
Impatiens acaulis } (Sispara ghât.)
„ rivalis }

Impatiens Denisonii } Sispara ghât.
" Jerdoniœ }
" Maculata (Pycarah.)
" latifolia } (Kotagherry and Coonoor.)
" fruticosa }
Vigna Wightii (northern slopes).
Bauhinia Benthamii (Sispara ghât, foot).
Osbeckia Gardneriana } (plateau.)
" Wightiana }
Sonerila grandiflora (Avalanche).
" speciosa (Ootacamund).
" elegans } (Sispara ghât.)
" versicolor }
" axilliaris }
Passiflora Leschenaultii (Coonoor).
Panetta siphonantha? (Sispara ghât).
Saprosma fragrans "
Hamiltonia suaveolens (Kulhutty ghât).
Vaccinium Leschenaultii (plateau).
" Neilgherrense "
Lysimachia Japonica "
Symplocos pulchra (Sispara ghât).
Jasminum revolutum (plateau).
Alstonia Vencuata (Coonoor ghât.)
Beaumatia Jerdoniana (northern slopes.)
Hoya pauciflora (Sispara ghât).
Boncerosia diffusa (foot of hills southern side.)
" Umbellata "
Porana racemosa (western slopes.)
Rivea tiliœfolia } (foot of hills, western slopes.)
Ipomea campanulata }
Argyreia splendens } (western slopes.)
" speciosa }
Ipomea campanulata } (southern slopes.)
" vitifolia }
Solanum ferox (northern slopes).
" Wightii (Coonoor).
Toronia Asiatica (Sispara ghât).

Pedicularis Perottetii (Sispara).
Æschynanthus Zeylanica (Sispara ghât).
Klugia notoniana (Coonoor Ghât).
Pajanelia Rheedii (western slopes.)
Thunbergia Hawteyneana (Kotagherry).
" Mysorensis } (western slopes.)
" Wightiana }
Strobilanthes gossypinus (Sispara).
" luridus (Neddwatam).
" tristis (Sispara ghât).
" sexennis (Ootacamund).
" pulcherrimus (Neddivatam).
" paniculatus (western slopes).
" violaceus (Sispara).
Barleria involucrata (Coonoor ghât).
Hedychium coronarium (western slopes).
Alpinia Rheedii.
Musa ornata.
Gloriosa superba (southern slopes).
Lilium Wallichianum.
" " var Neilgherrense.

All the above are well worthy of introduction into gardens and hot houses.

The orchids are very poor compared to those of the Himalayas and Birma, but the following are the best and well worthy of cultivation.

Dendrobium aqueum (western slopes.)
Cœlogyne all the species (plateau).
Arundina bambusifolia (western slopes).
Ipsia Malabarica.
Cyrtoptera flava } (western slopes.)
" fusca }
Kanda spathulata } (northern slopes.)
" Roxburghii }
Ærides Wightiana (western slopes.)
" Lindleyana (Kartary and Coonoor).
Calanthe Masuca (plateau in shades).
Platanthera Susannœ (northern slopes).

176 Ferns have been detected on these hills, and probably others as yet only known from other districts will yet be discovered on the western slopes. Two of these Ferns, Lastrea scalrosa and ferruginea, are, it is believed, not found elsewhere.

On the Impregnation of Timber.*

By Dr. Warth.

Timber consists of fibre and sap. The former is an organic combination of Carbon, Hydrogen and Oxygen. The latter is a mixture of water and colouring matter, fats, ethereal oils, resins, tannin, gum, mucus, starch, sugar, organic and inorganic salts, and albuminous substances.

Timber is liable to destruction by insects and by decomposition. The decomposition of the sap commences first and the sap communicates the decomposition to the fibre. The fibre itself is however not free from the liability to decomposition. In damp air chemically pure fibre decomposes. When linen or cotton cloth is bleached, the colouring substances are first oxidised with a small amount of the fibre, which is the same fibre as that of wood. After the colouring matter has been destroyed and nothing is left but the pure fibre, the latter commences to decompose, and unless the bleaching process were stopped the cloth would be wholly ruined. Hemp fibre is nearly pure and yet hempen ropes have to be protected against wet by means of tar. Thus it is clear from these examples that, even supposing the sap to have been removed or rendered harmless, the woody fibre itself if not protected is still liable to decomposition, although of course in a much smaller degree than when full of decomposing sap.

Damp with simultaneous access of air is most injurious to the wood as it promotes decomposition.

Precautions are taken when felling the timber that it should contain as little sap as possible. In parts of Europe timber is felled in winter and the trees are allowed to lie for some time with the branches and leaves on them, so that the budding which

---

* Part of this paper was read at the Simla Conference in October 1875.

takes place the following spring will exhaust the fluid remaining in the stem. For a similar purpose peeling off the bark of the living tree some time before felling has been recommended.

After the timber has been felled it has to be seasoned. During the seasoning process some substances contained in the wood not only lose their water, but also in a great measure their hygroscopic property. If after once having been dried or seasoned the wood becomes wet again it dries much sooner. Wood has also been seasoned by artificial heat. This process is sometimes very useful, but it requires care; otherwise the wood will crack and split. The seasoning by artificial heat has been adopted in connection with impregnation. Wood is not only mechanically injured, but actually decomposed at a temperature of 300°.

If after seasoning the wood is protected from moisture it will of course remain unaltered for a considerable time and a superficial coating is all that is required to render it still less liable to decomposition. It is wood exposed to the open air and to all atmospheric changes which requires special protection, and for the sake of which the system of impregnation has been introduced.

Railway sleepers are not only exposed to the rain and sun in succession, but they also have to lie on the ground from which they imbibe moisture To protect them in some measure care is taken that they are bedded in a good ballast which allows the rain-water to drain off quickly and decreases the absorption of moisture from below.

Coatings should of course only be applied to well seasoned wood, and it is unnecessary to explain that green or wet wood when coated over will not be able to dry and must therefore soon perish. A completely air-tight coating would preserve the wood for ever against any influence; but this is not possible. Wood has been boiled in tallow to give it an impervious coating; but it was a failure. Boiled coal-tar, free from ammonia, forms a very valuable protection to the wood. The coating of coal-tar can be repeated until the tar has penetrated the surface of the wood to the depth of half an inch. A very good substance for coating timber is also a solution of resin in linseed oil. Silicate of soda gives also a good protection.

A mere surface coating of the wood is also a good external protection. It prevents decomposition commencing from the outside.

In many cases superficial coatings are used with effect for keeping off white ants. In Burma, for instance, the timber of wooden structures is coated with petroleum as a protection against white ants, but the process has to be repeated every year. The ends of wooden rafters have been dipped into coal-tar and the access of white ants from the walls to the rafters has thereby been prevented. A coating composed of vegetable extract called "gutta gambier" with dammar oil and lime has been found effective against white ants. Painting the wood with a solution of sulphate of copper has also been practised.

To protect wood which has to withstand wind and weather something more than mere seasoning and coating is required. It must be altered constitutionally. This is done in two ways: by the removal of the sap, and by the addition to the wood of a new integral part in the shape of an antiseptic substance. As the antiseptic substance as a rule is capable of combining with the albumen of the sap, thus rendering the latter harmless, the expulsion of the sap can in most cases be dispensed with. There is one method which will be specially explained hereafter, where the expulsion of the sap and the addition of the antiseptic substance take place simultaneously.

Independently of this latter method the sap may be expelled by various means. Wood will lose a great part of its sap by long continued soaking in stagnant or still better running water. Steaming is a quicker process, but not much resorted to, because the wood is found to deteriorate. Heating the wood by means of dry air is preferred to steaming. This does not remove the solid contents of the sap, but it renders them less dangerous, because the albumen is coagulated by the high temperature. Albumen coagulates at 167°.

Antiseptic substances are also necessary for the preservation of the fibre even after the sap has been rendered harmless; because, as has been already explained, the fibre is in itself subject to decomposition. The following substances have been used or proposed for impregnation:—

Creosote of commerce which is made from coal-tar.
Carbolic acid in an alkaline solution.
Raw wood creosote.
Raw acetate of iron.
Sulphate of copper.
Chloride of zinc.
Sulphate of zinc.
Perchloride of mercury or corrosive sublimate.
Chloride of sodium or common salt.
Sulphate of soda, saltpetre, borax.
Sulphate of iron, arsenic.

The creosote of commerce and the raw wood creosote are oily substances and are used by themselves, whilst all the rest of the above substances are used in aqueous solutions.

The creosote of chemists is procured by the distillation of wood, and it is also contained in wood-smoke. A substance very similar to the genuine creosote is contained in coal-tar and this latter substance in its pure state is the so-called carbolic acid.

Genuine creosote is at ordinary temperatures a fluid, whilst carbolic acid is a solid. Carbolic acid exists as an article of commerce not only in a crystalline state of comparative purity, but also in a fluid state, being kept in solution by various tar oils. This fluid mixture of tar oils and carbolic acid is the creosote of commerce. It is not strictly correct to call it creosote, because the name of creosote was originally given to the antiseptic substance of the wood-tar only, but as the name is generally applied it is not expedient to make an exception here. The simple term creosote is therefore used in referring to the product of coal-tar, whilst if the product obtained from wood-tar is spoken of, the expression "genuine creosote" or "wood creosote" is made use of.

The two substances, wood creosote and carbolic acid, resemble each other so much that for many years their identity has been maintained. There are however re-actions which clearly mark them as different substances. While carbolic acid is solid at ordinary temperatures, wood creosote has only been obtained in a solid state at a temperature below freezing point. Further,

the wood creosote has the characteristic smell of wood smoke, whilst carbolic acid has a different smell. Wood creosote boils at 397°, whilst carbolic acid boils at 369°. The density of both substances is slightly above that of water. Both are little soluble in water, but mix in all proportions with alcohol and ether. Both coagulate albumen readily, a fact which explains to some extent their preserving properties. Both combine readily with alkalies, and in the case of both substances this property is made use of in separating them from other more neutral oils of wood- and coal-tars. Carbolic acid has also been combined with alkali for the purpose of preparing an aqueous solution for the impregnation of wood.

The dry distillation of wood yields, besides charcoal and gas, a heavy tar, and floating above the tar, an aqueous solution of acetic acid and of other substances.

This solution used to be called raw pyroligneous acid. This acid, when purified, proves however to be identical with acetic acid. The raw acid contains much wood spirit and 1 per cent of creosote. The impure acid in combination with iron is used for the impregnation of wood. This is what is meant by the raw acetate of iron enumerated amongst the antiseptic substances. The tar is distilled a second time when oils, first lighter, then heavier, than water are separated from the pitch. The heavier oils represent the raw wood creosote. For chemical purposes pure wood creosote is prepared from this raw material by repeated distillations, combination of the wood creosote with alkali, redecomposition with sulphuric acid, etc.

Coal yields besides coke and gas also a watery and an oily fluid. The former contains principally ammonia, the latter is subjected again to distillation. First more volatile oils are distilled and with them benzine. At a temperature ranging between 150° and 200° the oils containing carbolic acid are distilled. The mixture of these latter oils and the carbolic acid constitutes the raw creosote of commerce. For the purpose of obtaining chemically pure carbolic acid repeated distillations are carried on, during which the carbolic acid is combined with lime and separated by muriatic acid and then again combined with oxide of lead and set free by muriatic acid, etc.

The dry distillation of wood yields products in something like the following proportions, which, however, vary considerably with the method employed :—

Charcoal	... ...	25 per cent.
Wood-tar	... ...	7 „
Water with acetic acid, etc.	...	50 „
Gas	... ...	12 „
Loss	... ...	6 „
	Total ...	100 per cent.

Pines and firs being more resinous yield up to 14 per cent. of tar.

Wood-tar re-distilled yields half of its quantity in pitch and half in volatile substances. The volatile substances consist to a great extent of creosote. The quantity of raw creosote in the wood-tar is on an average equal to 3 per cent. of the wood originally employed, and the quantity of pure wood creosote in the wood-tar is on an average equal to at least 1 per cent. of the wood originally employed. The raw acetic acid also contains 1 per cent. of wood creosote. To make a solution of raw acetate of iron, old iron is thrown into the raw acetic acid, in which a sufficient quantity of the iron dissolves to neutralise all the acid. The solution of raw acetic acid is used for the impregnation of timber chiefly on account of the creosote it contains. Thus two kinds of material for impregnation are obtained from the dry distillation of wood—(1) the oily substance with much creosote; (2) the watery solution of acetate of iron with a small proportion of creosote. The latter material has not yet been generally approved of as a powerful antiseptic.

During the manufacture of gas from coal the following products are obtained :—

Coke	... ...	70 per cent.
Tar	... ...	6 „
Ammoniacal liquid	...	6 „
Gas	... ...	12 „
Loss	... ...	6 „
	Total ...	100 per cent.

The specific gravity of coal-tar is 1·016. When re-distilled it yields 25 per cent. of volatile oils, which can again be separated into lighter and heavier products. The former contain benzine, the latter contain carbolic acid, and they constitute the raw creosote of commerce. The quantity of pure carbolic acid contained in the whole of the tar is not less than 3 per cent. The quantity of carbolic acid in the creosote of commerce is sometimes very small indeed. For purposes of impregnation the proportion of carbolic acid ought to be not less than 8 or 10 per cent.

Creosote can be tested as to the proportion of carbolic acid it contains by a very simple process. The creosote is placed in a graduated glass tube. Solution of caustic alkali of a strength of 10 per cent. is added and the whole well shaken and afterwards allowed to settle. At the bottom unaltered alkali solution will be found, above this a syrup like combination of carbolic acid with the alkali, and last the undecomposed volatile oils. The diminution of volume which the volatile oils have suffered indicates the quantity of carbolic acid.

Peat and lignite yield similar products to those of wood and coal. Peat gives about 7 per cent. of tar and 30 per cent. of ammoniacal water. Lignite gives about 7 per cent. of tar and 40 per cent. of ammoniacal water. These tars contain large quantities of either creosote or carbolic acid.

Oil from bituminous shales contains also a substance similar to, although not quite identical with, either wood creosote or carbolic acid.

Petroleum has been proposed as a substance for impregnating wood with. No results of experiments are however known.

Creosote of commerce is the most important substance for the impregnation of wood. Not only is the carbolic acid which it contains a most powerful antiseptic, but the tar oils also which keep the carbolic acid in solution are a most valuable protection of the woody fibre against damp. Creosote is also cheap and procurable in large quantities, so that it is well adapted for use on a large scale. The carbolic acid of creosote has also been made use of for preserving bones and skins which are exported from Australia, Buenos Ayres and Chili. Further it is used for

disinfection and for many other purposes, which go far to prove its excellent antiseptic qualities.

Carbolic acid has been used in combination with alkali in aqueous solution as a substance for impregnation. After the first impregnation with the carbolic acid salt the wood has been saturated with a solution of sulphate of iron. This has the effect of causing free oxide of iron to be deposited in the pores of the wood and of setting the carbolic acid free from the alkali. This material has the advantage that it can be used with water, but it is certainly a pity to lose the services of the tar oils, which accompany the carbolic acid in the creosote.

The raw wood creosote as an antiseptic for the preservation of wood is in no way inferior to the creosote of commerce. On the contrary, the raw wood creosote contains much more really antiseptic substances than the creosote of commerce does. It is however very expensive and scarcely procurable in quantities large enough for purposes of impregnation.

Raw acetate of iron can be used in aqueous solution and this solution is able to take up a large proportion of wood creosote, which latter may thus be brought into the wood simultaneously with the iron salt. This substance is costly and the results are questionable.

The antiseptic qualities of sulphate of copper have been proved beyond a doubt and it is very extensively used. There are instances when the impregnation of wood with sulphate of copper has failed. It is however unfair to ascribe all failures to the substance itself. Mineral salts when used as antiseptics have deficiencies from which creosote is free, but otherwise sulphate of copper is a good material. Sulphate of copper is used in solutions with 1 to 2 per cent. of the salt.

Chloride of zinc is a good antiseptic for the impregnation of wood. It is, however, not quite so good as sulphate of copper, but it is cheap and on that account not less important than the copper salt. The impregnation with chloride of zinc offers the advantage that the wood does not become hard and can be dressed after the impregnation. Wood impregnated with chloride of zinc will also take coatings of oil paint.

Sulphate of zinc would no doubt be as efficacious as chloride of zinc, but it is not employed owing to its being more expensive than chloride of zinc.

The perchloride of mercury or corrosive sublimate has the disadvantage of being extremely poisonous and very costly. Its antiseptic qualities are indisputable. It is used for the preservation of specimens of natural history, pictures, &c. It coagulates albumen most readily. The solution which is used for impregnation contains 1 per cent. of the salt or even less. Kyan introduced the use of corrosive sublimate. The process is called after him the "Kyanizing process." Corrosive sublimate is not much used, owing to its being more costly than other antiseptic substances.

Common salt is well known to have the property of preserving organic substances from decomposition. It has been found that timber in salt mines keeps remarkably well. The timbers of ships loaded with salt fish remain in a good state of preservation. There is also a custom called the salting of ships, the salt being strewn between the inner and outer planking of the ships to preserve the wood below the waterline. Sleepers have been preserved on the Magdeburg and Leipzig railway by throwing waste salt from the neighbouring saltworks over them. This salt was carried in the shape of brine into the sleepers when it rained. Of course, the salt had to be often renewed. When salt is employed it must be used in sufficient quantity to prevent its being washed away. Salt is a very good preservative in damp places. When used in too small quantities salt will have only the effect of attracting moisture without protecting the wood. Salt has been repeatedly recommended for impregnating purposes, but applications of it for railway sleepers are rare.

Sulphate of soda is known also as an antiseptic substance. In India it is known under the name of "kari" and used for the preservation of raw hides before they reach the tanneries. Sulphate of soda has not yet been used for the impregnation of wood. It might be of some interest to know what result sulphate of soda would yield because "kari" is cheap in India.

Saltpetre is a similar material, which could easily be obtain-

ed in India. Saltpetre is antiseptic, but no results with it as a material for impregnating wood have been made known.

Borax has only been lately proposed.

Sulphate of iron has been tried in some cases, but is no longer used, other metallic salts having been proved to be superior. Sulphate of iron has the effect of hardening wood.

Arsenic was used for the impregnation of sleepers in 1840, in England. It proved effective in the case which is on record, but its use has died out.

A kind of petrifaction of wood has been produced by a successive impregnation with two different solutions; these solutions being so chosen that they will form a precipitate when mixed. This precipitate remains as an insoluble, in fact stony, substance, and as it were petrifies the wood. At first sight it would appear that this process might add to the durability of wood, but in actual practice it resulted in nothing and has been entirely abandoned. The stony particles massed in the minute cavities of the wood have no chemical action on the woody fibre nor can they protect it from moisture. The damp enters the wood almost as freely as if foreign bodies were not present, because these foreign bodies can only partially fill the cavities.

The combinations of solutions which have been tried are :—

Alum and alkali.
Silicate of potash and sulphuric acid.
Chloride of barium and sulphate of iron.
Chloride of barium and carbonate of soda.
Chloride of calcium and sulphate of soda.
Tin or copper salts and alkali.
Sulphate of iron and carbonate of soda.

Having enumerated the antiseptic substances with which wood is impregnated, it remains to describe the various processes by which the impregnation is performed.

They are:—First, the impregnation of wood with vaporous substances; second, the impregnation with fluids.

The impregnation of wood with vaporous substances, if practicable, would have very great advantages over the impregnation, with fluids. Mr. Molesworth therefore has urged the ex-

pediency of making experiments on a large scale with vapour of an antiseptic substance. The natural process of impregnation is that with smoke. Wood smoke, containing creosote, when acting a long time on wood, renders the wood exceedingly durable. Open woodfires in huts preserve the timber and straw of the roofs, and are known to preserve from decay even new hay and corn when stored in an insufficiently dry state under the roof. A Frenchman named Moll obtained a patent in 1855 for impregnating wood by exposing it in a closed chamber to the vapour of creosote. In Vienna, a man named Paradies, claims to have been successful with the vapour of tar.

A difficulty appears to lie in the high temperature at which carbolic acid boils, namely, 369°. Genuine wood creosote requires even as much as 397°. Wood itself commences to decompose, when subjected to a temperature higher than 300°. The creosote must therefore be largely mixed with other vapours and gases to render it volatile at a temperature which is not injurious to the wood.

Four different processes are made use of for impregnating wood with liquids :—

1. Spontaneous ascent of the antiseptic fluid in the stem of the living tree, sometimes aided by pressure.

2. Replacement of the sap in felled stems by the antiseptic fluid under hydraulic pressure.

3. Soaking of the wood in the cold or boiling antiseptic fluid.

4. The pneumatic process. Exhaustion of the air from the wood in a boiler, and application of high pressure to force the fluid into the wood.

The spontaneous ascent of the antiseptic fluid in the stem of the living tree was tried in Germany by Oberförster Biermann and Dr. Brandis. It was carried on in the following way :—

A hole was bored into the stem at the base, and through a tube, which was connected with a cask full of antiseptic fluid, the latter was allowed to flow into the hole. The tree at once commenced to drink up the fluid. The constant evaporation of water by the leaves causes under ordinary circumstances the rising of water from the roots up into the stem and branches.

The antiseptic fluid being however offered much more readily than the water supplied by the roots, and as a precaution some of the roots being cut through, the antiseptic fluid alone rises in the stem and spreads during fair weather within 24 hours over the whole tree, which, being thus impregnated with sulphate of copper or chloride of zinc, dies in a few days.

A similar process was tried by Uzielli, who used the following antiseptic substances :—

Raw pyrolignite (acetate) of iron or copper.

Common salt.

White arsenic.

Solution of resin in oil of turpentine or alcohol.

A drawback to this process is the necessity of impregnating the whole tree, and the waste of antiseptic fluid arising therefrom. This would however not matter so much; because we have a very cheap material—the chloride of zinc. A more serious obstacle may be the difficulty of floating the timber after the impregnation. This may have been one reason, why this process, which is exceedingly simple, and at the same time most perfect, has not hitherto been employed in India.

2. Replacement of the sap in felled stems by the antiseptic fluid under hydraulic pressure. (Boucherie's process.)

Newly felled logs are laid horizontally and one end is fitted up in such a way that the antiseptic fluid can be brought to bear upon the wood under a hydraulic pressure of a column of water 30 feet high. The stems have the bark on them, and the fluid enters the stem and flows towards the other end. As soon as the antiseptic fluid commences to enter at one end the sap of the tree exudes at the other end, and is gradually expelled, the antiseptic fluid taking its place. Moderate sized trees yield several tons of expelled sap. At first the issuing fluid is pure sap, but after some time a mixture of sap and antiseptic fluid takes place in the interior of the stem, and the two fluids issue together. However by continuing the admission of antiseptic fluid the sap is made more and more to disappear. The result is considered satisfactory, when the last fluid, which issues from the tree, contains only one-third of sap and two-thirds of antiseptic fluid.

The antiseptic substance exclusively used in this process is sulphate of copper. It is employed in a weak solution containing 1 per cent. of salt. Success in this system very much depends upon the kind of wood. The process answers very well with beech, it also does for pine, but oak is entirely unsuitable. The antiseptic fluid cannot pass through the hard old wood of the oak. Instead of laying the stems horizontally, they have also been placed upright, and the fluid was made to enter from above. No oily substance like creosote could be used with this process.

3. The mere soaking of the wood although very convenient is of course as a rule a most imperfect process; still there are cases, where soaking is resorted to with some success. Soaking is fairly illustrated by experiments made at the Calcutta Mint. Some sleepers were immersed in tar for a period not less than 60 days, and yet they showed scarcely any penetration. Chloride of zinc in solution has been applied to wood by means of soaking, but it was afterwards found necessary to adopt a more perfect process (which is described below). The timber used to be immersed two days for every inch in thickness, and after the soaking was left to dry for 14 to 19 days. Soaking with sulphate of copper was found not to answer well. In the above process a great deal depends on the wood; very light wood well dried in the air, or artificially dried, takes up fluid readily.

Heating the fluid also lends further aid to the impregnation. Thus in one instance wood was artificially dried, and whilst hot was immersed in hot creosote, when it absorbed as much as 8 or 9 pounds of creosote per cubic foot. Further, on a certain German Railway, sleepers were immersed for 4 hours in creosote raised to a temperature of 150°. The impregnation was considered fairly satisfactory for such a cheap method. Boiling of sleepers with steam in a solution of metallic salt has not been found to answer. It may be expected that mere soaking succeeds best when the quantity of antiseptic substance is limited. This is the case when perchloride of mercury or corrosive sublimate is used. Corrosive sublimate is very dear; and impregnation has been practised by soaking the sleepers in a

solution of it from 1 to 10 days. The solution contained 1 per cent. of the salt or less, and only half an ounce of salt is expended on one cubic foot of impregnated wood.

4. The Pneumatic Process of Impregnation.

This is the most perfect process, and gives satisfaction when others fail. The following are the ordinary requirements of a pneumatic impregnating apparatus.

(1)—Two cylindrical boilers of 6 feet diameter capable of withstanding the pressure of the atmosphere during the evacuation of the air in them, and also of an interior pressure produced by a hydraulic pump worked up to 150lbs. per square inch.

(2)—An air pump to exhaust the air from the boilers.

(3)—A water pump.

(4)—An hydraulic force pump to supply the boilers with fluid up to a pressure of 150lbs. per square inch.

(5)—An engine of about 10-horse powers to work the pump.

(6)—Reservoirs for the antiseptic fluid, &c.

(7)—Tramways to bring the wood on waggons to and from the boilers: the wagons being of such shape that they can be run into the boilers, which are provided with rails and large top-pieces for the purpose.

There is nothing particular about these requirements, which can all be obtained without difficulty. The boilers differ in nothing but their top-pieces from the ordinary steam-boilers; and the air and water pumps are the same as those manufactured for other purposes. Any engine will do, or a water-wheel, if there should be sufficient water-power available. The tramways, reservoirs, &c., may be constructed as most convenient in each case, so no description of them is necessary.

The Pneumatic Process. The wood is brought to the apparatus in its finished state, it is packed on the wagons, and with them pushed into the impregnation-boiler, and then the lid is closed and made air-tight. If steaming is to take place it is done now before further operations. Steaming of course is only suitable when aqueous solutions are used for impregnation, and when the wood is not already well seasoned; it would never do to steam the wood before

the impregnation with oily creosote. The creosote and the oils would fix the water in the wood. If creosote is the substance with which the wood is to be impregnated, the wood may, with advantage, be subjected to artificial dry heat. After the steaming up to 150°, the liquid must be drawn off which has collected on the bottom of the boiler. When all fluid has left the boiler, the exhaustion of the air, by means of the air-pump, is commenced. The minimum of pressure is reached after half an hour's pumping, but the work has to be continued as the wood does not give up its air all at once.

After the exhaustion of the air, the impregnating fluid is admitted. Creosote is often used in a warm state of 100 to 120 degrees temperature so as to render it more liquid. Whilst the fluid is forced in by superior pressure of the atmosphere, the air-pump must still continue playing, otherwise the rarified air in the boiler would, by being limited to a smaller and smaller space gradually, become denser, and would fill the uppermost pieces of timber, rendering them thus incapable of receiving the impregnating fluid like the other timbers.

Care must be taken to avoid overfilling the boiler, because otherwise the antiseptic fluid would get into the air pump. When the boiler is very nearly full the access of the fluid is stopped, but the air pump is worked for a short period longer. After this the air pump is stopped, and the compression of the antiseptic fluid in the boiler commences. The force-pump drives more and more fluid into the boiler until a pressure of 120 pounds, sometimes of 150 pounds, per square inch is reached. This pressure is kept up for a time, varying from 2 to 16 hours, during which time the wood constantly imbibes fluid. The process is finished up by running the fluid off, opening the head-piece of the boiler, and taking the wagons out.

The completeness of the impregnation depends in a great measure upon the length of time during which the pressure is maintained. As a rule, the time allowed for the various operations is such that the boilers can be filled twice every working day.

The pneumatic process is adopted both for creosote and for

metallic salts. As regards the sulphate of copper it is however to be remembered that a solution of sulphate of copper cannot be brought into the iron boiler. Factories where sulphate of copper is used must therefore be provided with costly boilers made of copper.

When creosote is the antiseptic substance employed the amount taken up by pine and other soft woods is 10 to 12 pounds per cubic foot. This amount is considered to be sufficient, and even a smaller quantity of creosote would answer in many cases. Hard woods take up much less creosote. Oak, for instance, takes up only 2 or 3 pounds of the oil, even under the heaviest pressure possible. Indian sal wood was found to be penetrated only to $\frac{1}{8}$th of an inch from the surface during one particular trial. Sapwood is easier penetrated than old wood, in which the circulation of the sap had ceased before the felling of the tree. There need be no hesitation as regards the use of impregnated sapwood. If well impregnated it is often found superior to heartwood, which has taken up an insufficient quantity of creosote. Examples of woods admitting easy and perfect impregnation are: Maple, alder, beech, plane, birch, lime-tree. Not quite so easy are the following: Pine, fir, larch, poplar, elm. The oak and acacia are scarcely suited for impregnation.

The following experiments show what amount of creosote some of the harder Indian woods were found to take up:—

	Pounds of creosote per cubic foot.		Pounds of creosote per cubic foot.
Sissú ...	... $3\frac{3}{4}$	Sál ...	... 1
Sundri ...	... $2\frac{1}{4}$	Ironwood	... 1
Teak ...	... $1\frac{3}{4}$	Mahogany	... $0\frac{3}{4}$
Swan-river wood (Australia)	... $1\frac{3}{4}$	Jaman ...	... $0\frac{3}{4}$

Experiments with aqueous solution of chloride of zinc go to corroborate the results which were obtained from creosote, the hard wood taking up much less than the soft wood. The following table shows the quantity of solution of chloride of zinc taken up under the pneumatic treatment by different kinds of wood:—

1 cubic foot of pine wood	...	16 lbs.	solution.
1 „ beech	...	18 „	„
1 „ oak	...	8 „	„

The small capability of some hard woods to take up antiseptic fluids matters little as long as these hard woods are able to endure as long unimpregnated. This is more or less the case with oak in Europe and with sál and teak in India. Sál and teak, as also deodar, are used unimpregnated for sleepers in India. The class of woods which require impregnation are pines (*Pinus longifolia, P. excelsa, Abies Smithiana*) which are capable of taking up a full quantity of creosote or other antiseptic fluid. These light and less valuable timbers can thus be impregnated and rendered as durable as the superior deodar, sál and teak.

It remains to decide what method of impregnation should be adopted in India for railway sleepers. We find that of all the methods enumerated only three have to be considered. These three are the following:—

1. Creosoting, that is, the impregnation with common creosote by means of the pneumatic process.

2. The method of introducing a solution of sulphate of copper by means of replacement of the sap in felled stems.

3. The method of introducing a solution of chloride of zinc with the pneumatic process.

A fourth method: soaking the wood in a solution of corrosive sublimate comes next to the above three in importance, but the material is too expensive.

Among the above three methods creosoting stands foremost. Mr. Molesworth says:

"I cannot recommend that impregnation by sulphate of copper, chloride of zinc, or other chemical mixtures should be adopted. I have invariably found them to fail, and at all events the impregnation by such fluids has not been brought to sufficient perfection to commend itself to general use."

Creosote is undoubtedly the first of the substances used for impregnation. It is the best antiseptic, and it increases rather than diminishes the strength of soft wood, its effect being thus contrary to that of metallic salts. It also resists more than other substances the lixiviating action of the water. Creosote, when used with the pneumatic process, doubles the durability of soft woods, and there is no risk of failures. Creosote also

keeps off white ants. Creosoted sleepers are admirably fitted for India.

The method of sap-replacement by means of sulphate of copper solution would not be generally applicable in India; because the wood has to be floated, and takes a long time in reaching its destination. The use of chloride of zinc has the disadvantage of rapidly corroding iron, and consequently the nails soon become loose in sleepers impregnated with this substance. Yet this salt would be the one to be substituted in the absence of creosote. The pneumatic process is undoubtedly the most advantageous process.

In England the pneumatic process with creosote is almost exclusively applied. The Cologne—Minden, and Rhine Railway, and several other German Railways also use creosote. Creosoted sleepers have also been successfully used in India.

The impregnation with sulphate of copper by the process of sap-replacement was first introduced on a large scale in France, and lately Austrian Railways have taken up the same method. In Upper Italy, blue vitriol has been used to impregnate beech wood by means of the pneumatic process. In Bavaria sulphate of copper is also employed. In Brunswick and Hanover impregnation with chloride of zinc is carried on by means of the pneumatic process; whilst perchloride of mercury is made use of in Nassau and Baden.

In 1873, a Mr. R. D. Tander, (patentee of the Indo-American Wood-preserving Substance), applied for some sample sleepers in order to try how much creosote they would absorb. Samples were sent, but no report has been received.

The following examples may give a general idea of the cost of impregnating machines adapted to the pneumatic process:—

In India.—

A machine was once offered for sale at Phillour for	£1,175	0	0
The E. I. Railway machinery used at Alligurh, cost at Calcutta	£1,750	0	0
The E. I. Railway machinery at Bareilly used in 1874, for creosoting chil-sleepers, cost ...	£2,200	0	0
The large machinery at Sahibgunge ...	£3,000	0	0

In Europe.—

A machinery with 2 boilers at Brunswick ...	£2,800	0	0
Do. do. at Hildesheim in Hanover ...	£1,500	0	0
Do. do. with 2 copper boilers for impregnation with sulphate of copper only ...	£2,500	0	0
Do. do. of the Cologne—Minden Railway	£3,300	0	0

The price of the substances used for impregnation naturally varies considerably. The following European prices are therefore to be taken only as approximate, and intended to give a general idea of the cost of antiseptics used for impregnation:

Prices per ton in Europe.

	£	*s.*	*d.*
Creosote...	4	0	0
Chloride of zinc	10	0	0
Sulphate of copper	50	0	0
Perchloride of mercury	500	0	0

The total cost of impregnation varies even more than the price of the materials. The following data will give some idea of the cost of impregnating pine wood :—

	£	*s.*	*d.*
Creosote by the pneumatic process, per c. f. ...	0	0	4
Chloride of zinc do. do. do. ...	0	0	2
Sulphate of copper by sap-replacement, per c. f.	0	0	4
Perchloride of mercury by soaking only, do.	0	0	4

The cost of creosoting sleepers in India depends entirely upon the rate at which creosote can be imported from England, as there is at present no material with which to replace English creosote. Ship-owners dislike creosote as a cargo, for it necessitates the exclusion of other goods from the hold. The same objection, however, applies to the shipping of creosoted sleepers from England. From Calcutta to a place so far from the coast as Lahore the railway freight is 95*s.* per ton. A ton of creosote imported from England to Calcutta costs say £5, and the same would cost in Lahore about £10.

At Lahore the cost of the English creosote, necessary for impregnating a sleeper of 3½ cubic feet, would thus be 3*s.* 2*d.* If we add the cost of labour and apparatus we may assume 3*s.* 6*d.*,

as the cost of creosoting one Indian sleeper at Lahore with English creosote. Creosoted pine sleepers can be imported from England to India (Calcutta) at 7*s.* 3*d.* per sleeper. From Calcutta to Lahore the railway freight would be 4*s.* per sleeper. Thus the cost of one creosoted pine sleeper, landed at Lahore from England, would be 11*s.* 3*d.* This would be more expensive than Indian sleepers creosoted at Lahore with imported creosote. Mr. Molesworth has found that at Agra imported creosoted sleepers are cheaper than Indian sleepers creosoted at Agra. At Delhi, imported creosoted sleepers. and Indian sleepers creosoted at Delhi have been found to be equal in cost. As we go farther north, the difference in cost becomes greater in favour of Indian creosoted sleepers. It is clear that sleepers of inferior Indian pines might with advantage be impregnated with creosote from England for the Punjab Northern State Railway. The English creosoted sleepers could not compete in the northern parts of the Punjab with sleepers creosoted in India.

Far more desirable would it be if Indian sleepers could be creosoted with some material procurable in the country. There are, however, no data at present to show whether any substance can be obtained cheap enough to compete with creosote imported from England. In Calcutta the coal-tar from the gas works is sold at the exceedingly high price of 90*s.* per ton. This is almost as much as the price of English creosote sold at Calcutta, and besides this high price, only about 25 per cent. of the Calcutta coal-tar would be efficacious for impregnation.

The use of Burmese earth-oil has been suggested, but there are no data at all to show whether earth-oil would act as a sufficiently good preservative, nor would the Burmese earth-oil be much cheaper than creosote from England.

The products of distillation from wood might be used instead of coal-tar oil, but they are very expensive. Only at places far distant from any sea port they might possibly compete with English creosote. As above stated a ton of English imported creosote costs at Lahore, £10. As this is the rate at which good wood-tar was procurable in Europe some years ago, it seems not altogether impossible that wood-tar could be manufactured in this country at the same price.

Wood-tar oil might even be dearer than creosote and still compete with the creosote, because the produce of the wood contains more of the valuable real antiseptic substance, than the produce of coal does. For the same reason wood-tar oil would be an excellent material to mix with English creosote. The question of the manufacture of wood-creosote in India recommends itself as a subject of special enquiry. This much, however, is certain that it is highly advisable to creosote in India sleepers from inferior Indian woods, wherever there is not an abundance of superior woods, and where, at the same time, the distance from the coast prevents the importation of creosoted sleepers from England.

Technical terms.

ALL technical terms hitherto employed are literal translations of either French or German words, and one would, therefore, suppose that the best definitions would invariably be such as are accepted by authors of standard French and German books on Forestry. As some of Mr. Smythies' definitions do not, in my opinion, answer to those given by eminent continental foresters, I beg to be allowed to make a few remarks on this subject before our Forest Terminology is finally settled.

One thing, I think, we should carefully avoid, and that is the introduction of literal translations—as, for instance, *high forest*—of terms which foreigners, themselves, acknowledge to be most inappropriate.

It is difficult to exaggerate the importance of good terminology and good definitions. We know the importance men of science attach to a strict use of scientific terms, and the confusion which has often been occasioned by employing them in a loose way. We need not look beyond our own department for an example of the evil of careless nomenclature A considerable time seems to have elapsed between the creation of the so-called *survey division* and the discovery that surveying was only one of the least important of its numerous duties,*

* See a remark of Mr. Powell, in the proceedings of the Forest Conference, 1873-74, p. 105.—J. B.

a mistake which could have been much less likely to have arisen, if that division had not been most improperly styled *survey division.*

I will now proceed to review a few of the technical terms and definitions proposed in Mr. Smythies' paper, and afterwards submit one or two others for the consideration of the readers of the *Forester.*

I.

Working-plan.

As I understand this word, it corresponds to the French term *projet d'amenagement*, and not to the *plan d'exploitation.* It is evidently derived from the German *Wirthschaft's plan* or *Betriebs plan*, of which the exploitation-plan forms only a part. Any one, who will compare a French with a German book on the subject, will certainly find that *Wirthschaft's plan*, or working-plan, corresponds to *projet d'amenagement*, and *Hauungs plan*, or felling plan, to *plan d'exploitation.* The working plan is, in fact, a recapitulation of the most important data collected during the organization of a forest, and contains a description of its state, area, sub-division, reasons for adopting the revolution chosen, data on which the supposed yield is based, felling or exploitation-plan, regeneration-plan and other minor matters. I propose, therefore, to employ the term *working-plan* in the latter sense, and

Exploitation-plan

as corresponding to the *plan d'exploitation* of the French Forester, which consists in a tabular statement of the portions of the forest to be cut and the yield of material during a period.

Working-circle

Corresponds to the German *Wirthschaftsbezirk.* In this sense, it would denote several groups of forest, or blocks, not necessarily continuous, but sufficiently large and compact to be placed under a senior executive officer, either a Deputy Conservator or Senior Assistant; the working-circle would generally coincide with some civil division of the province, probably one or more Deputy Commissionerships or Collectorates. The term Division appears to me synonymous and equally expressive.*

* The word "division" is already used to indicate an administrative forest charge, which is a thing entirely different from the area to which each special working plan applies, though the two may coincide in certain instances.—THE EDITOR.

Block.

(From the German *Block, Verband*) I would define as a tolerably compact forest, consisting of one or more *series*,* and so regular and similar as regards station, vegetation, etc., as to admit of one working-plan being made for the whole forest.

Compartment.

(*Fr. Division*, Gr., *Abtheilung*), is the smallest *permanent* sub-division of a forest, the sub-compartment being the smallest and distinguished from the former chiefly by its transient nature. It is, for example, usual to divide forests into compartments of convenient size—50 to 100 acres—and, wherever no well-defined boundary, such as a road or river, is available, to separate them by rides cutting each other, if possible, at right angles. The size and form of the sections thus formed depend on many considerations, such as the topography of the ground, species and their age-classes, station and so forth; but the number, size and shape of the sub-compartments of any compartment will depend entirely on the number, size and shape of the different groups of trees in such compartment, and one of the objects of the Organization-Department is gradually to give a uniform character to the whole and thus ultimately to do away with sub-compartments altogether; but the compartments, which are separated by strongly-marked natural features, cleared lines, or roads, are unchangeable.†

Rotation or Revolution.

There is no apparent reason for not retaining the French word *revolution*, more particularly as the word *rotation* is already used in quite a different sense by agriculturists—and consequently also by foresters—who use it to denote a change of species.

High Forest

Is a literal translation of the word *Hochwald*, a term which Germans themselves acknowledge to be most ill-chosen; in the

---

* For an explanation of this word see page 52.—J. B.

† What Jangah Bulbul says is almost precisely, what we, on several occasions, have tried to impress on our colleagues. The compartment may be called the unity of working area, and a convenient size of it is of far greater importance, than natural boundaries, in fact roads are in most cases preferable.—THE EDITOR.

first place, because a hochwald is often destined to be cut down long before it has attained its full height, and in the second, because coppice, although allowed to grow into a high forest, is still coppice, because it has not been regenerated by seed. I propose, therefore, to employ the term *seedling-forest* to denote all forest raised directly from seed, in contradistinction to coppice, which is the result of the cutting or burning down of a forest.

Seedling-shoot.

Instead of this term, I would employ the word *coppice-shoot*, which is certainly much more expressive. *Seedling-shoot* is, moreover, scarcely a proper term, as it might be more correctly used to denote the shoots of trees raised directly from seed.

Leaf-canopy.

Would not *leaf-cover*, or simply *cover*, answer the purpose just as well as this rather farfetched word? There would be no difficulty in expressing the exact amount of cover which would be given in decimals, perfect cover being equal to one.

Mature tree.

I would apply the word *maturity* to trees in the same sense as it is used in reference to any other organism. Instead of giving it a different meaning we might use the term *exploitability* in a technical sense. In the ordinary acceptation of the word, a forest would be mature when its trees were capable of reproducing themselves by seed and as soon as their annual growth both in height and bulk had attained its maximum. If the definition decided on at the Simla Conference is accepted, it will not always be applicable, because frequently the increase in bulk of forest species (e. g. bamboos) is never, during the whole life of the plant, "of importance," no matter whether we regard the matter from a technical or physical point of view.

Leaf-tree.

This is scarcely a correct translation of the word *Laubholz*. *Laub* does not signify *leaf*; it is at least a collective term and would have been better rendered in English by *foliage*. The German forester probably first used the word in the sense of

shade-giving, rather than in the sense of *leaf-bearing*. Viewed in this light, the word as used in Germany is intelligible, as broad-leaved trees certainly ought to afford more shade than spike-leaved trees. But another much more serious objection to the use of the term *leaf-tree* is, that it cannot be correctly employed to distinguish broad-leaved trees from conifers, for a conifer is also a leaf-tree, and to employ the term to distinguish one class of trees from another is, therefore, absurd.

II.

The co-efficient of form

Is the fraction which, when multiplied by the height and the area of the base (*at breast height*) of a tree, gives its cubic contents. The words *reducing-factor* and *form-figure* have been sometimes used, but they are awkward and unenglish translations of the words *Reduktionsbruch* and *Formzahl*, and, I think, not nearly so expressive as that now proposed.

Series.

Blocks may be divided into several *series*, the aggregate annual cuttings in which give the amount required for a sustained yield. In the simplest case, a block would consist of one series with a yearly cutting equal to the capability of the block. It is not necessary that a portion of each series be cut yearly, nor that the series be equal, or of any particular size. A series is, as it were, a block within a block, but the series has not, like the block, a sustained yield. I am aware that this is not at all an expressive term, but I give it for want of a better. The French use the word in a similar sense, only their *série* always has a number of cuttings corresponding to the number of years in the revolution, and, therefore, a sustained annual yield. The term *cutting-line* has, I believe, been used in the sense of series.

The Ideal forest

Is one in which the gradation of age-classes is perfect, and which gives, for the station, the greatest conceivable sustained yield. The Germans and French use the term *normal forest*, which is inaccurate; firstly, because, strictly speaking, nothing in nature is abnormal, and, secondly, because the model-forest

is a phenomenon confined to the forester's brain, and therefore abnormal.

Timber.

All wood used in building or carpentry.

Barren wood.

All wood not *timber*. At present bamboos are, generally, neither classed as timber nor as fire wood. The proposed definition of timber would bring them under this category.

Fence.

When domestic animals or men, or both, are kept out of a forest, it is *in fence.*

Station.

A general term, expressive of the soil, climate and situation, or the three elements on which the productive power of the land depends.

These are all terms of frequent occurrence which would inevitably occur in every report on forest organization, and for this reason it would be as well to have their meaning settled at once.

JANGALI BULBUL.

Remarks on Mr. Amery's article.* "The Special Survey Branch."

Mr. Amery, in his paper on the *Special Survey Branch*, quite overlooks a most important point, *viz.*, that exact measurements can only be arrived at by making the original maps on a large scale. Even for demarcation work the 4-inch scale is, in my opinion, too small, and it would be utterly absurd to attempt the demarcation of any forest I have seen on the half-inch or one-inch scale. We have only to consider that a boundary-line 50 yards long would be represented on the half-inch scale by less than the 70th part of an inch, a mere dot; that, no matter how carefully the survey were executed, it would be impossible to measure off distances accurately to

* Vol. I., p. 386.

within even one hundred yards; and that, on account of their shortness, many boundary-lines would have to be left out altogether.

Mr. Amery is evidently not very well versed in surveying, or we should not find him writing about maps on a scale of half an inch *square*, and proposing to make original maps on the one-inch scale and their enlarged copies on the 4 and 8-inch scales; we must therefore decline to accept, on his authority alone, the statement that the cost of a survey on the one-inch scale would be one quarter of what it would be if done to the 4 or 8-inch scale. Fewer angles would have to be taken and time would thus be saved, and each survey might comprise a larger area, whereby doubtless a considerable saving might be effected, but we still think that Mr. Amery must be mistaken, and that the saving would be much less than he imagines and dearly bought at the cost of accuracy.

I cannot tell on whose authority Mr. Amery says that in Germany "maps on at least the 4-inch scale are necessary." If he had said on the 20-inch scale, he would have been much nearer the mark. In Hanover, original maps are made to a scale of $\frac{1}{3000}$, and in other states the scale is never less than $\frac{1}{5000}$; our maps are made on a scale of $\frac{1}{15840}$, and are, therefore, from five to twenty-five times smaller than German maps.

It is quite possible that in many cases there may be good reasons to doubt whether there is any immediate necessity of a trigonometrical survey; but, if there is to be one at all, let it at all events be done on a really useful scale and one that admits of all the boundaries being shewn, and the four-inch is the smallest which fulfils the latter condition even tolerably. If the value of our forests does not warrant an expenditure sufficient to defray the cost of accurate maps, sketch-maps, made in the same way as military drawings, would answer our purpose as well as trigonometrical maps on the 1-inch scale, and cost comparatively little.

As regards the proposal to utilize the Revenue Survey maps, all I can say is that those I have seen, even the working-maps on the 8-inch scale are extremely inaccurate, and that, so far as the part of the country with which I am acquainted is concerned,

none can be relied on; where, however, accurate maps are not available, they would certainly be found most useful, and answer Mr. Amery's purpose nearly, if not quite, as well as the most accurate plans.

The proposal to enlarge from the one-each scale to the 4 and 8-inch scales is the very worst possible. I have already shewn the degree of accuracy which may be expected from carefully executed maps on so small a scale as the half-inch; practically, the one-inch scale is no better, and it is scarcely necessary to add that the unavoidable errors of the smaller map would be reproduced on the larger, thus greatly increasing its size without adding in the slightest degree to its usefulness.

Mr. Amery himself acknowledges that "a forest map to be of any value should be on a sufficiently large scale to admit of the representation of the general features of the forest it is intended to illustrate." Surely he does not suppose that this could be done on the 1-inch scale. It seems odd that it should never have occurred to Mr. Amery, as it probably did to most of his readers, that all these new ideas regarding the survey would have been applied long ago by the Chief of the Survey Branch if worth anything.

It is not necessary to repeat the arguments in favour of teaching foresters to survey; this question has, I think, been long ago settled on general grounds and against Mr. Amery, and those who were still wavering before the production of Mr. Amery's paper are scarcely likely to be so now.

Mr. Amery remarks that in Germany the supply exactly equals the demand, but that in India it is impossible to foresee the demand in the immediate future. We can, however, assure him that even in Germany forest affairs are not all *couleur de rose;* that it is generally admitted that the supply exceeds the demand; and that there is now a strong party in favour of reducing the supply by shortening the revolution in Government seedling-forests, hitherto grown on the mistaken principle that it is the duty of the State to grow the greatest possible quantity of material at any price.

Throughout the paper too much importance is, I think, attached to the question of supply and demand. I do not see how it

can influence the working plan in an important degree. No matter how much the supply or the demand fluctuates, the object of the working plan will always be to bring about order and a sustained yield, and, although prices may vary greatly, there is no reason to suppose that the demand for timber of particular dimensions is more likely to vary here than in Europe. This being the case, the revolution, and consequently also the quantity of wood to be cut annually, would remain the same under all conceivable conditions; if, at some future period, what was barren wood at the time of the organization could be profitably brought to market, so much the better, the plan would be revised accordingly, but not thrown aside. Suppose, for instance, we have a mixed forest of which only the teak-timber was saleable at the time of organization, but that subsequently the construction of a railway brings also other species as firewood into the market, our plan of operations for the teak would still hold good, although we would have to make another for the firewood. And if we consider the case of a forest in which certain species only were available as timber at the time of organization, but of which other species afterwards became marketable as timber, we arrive at the same conclusion, *viz.*, that there need be no important changes in the working of the older timber-species, and that the value of the original organization is in no way lessened.*

No one would ever think of organizing a forest which could not be worked profitably, but it would be equally foolish to shut up valuable forests on the chance of making a good *haul* if ever the much desired famine arrives, and yet this masterly inactivity is what Mr. Amery seems to advocate when putting forward the difficulty of solving the question of supply and demand as an argument against organization. That Mr. Amery is right in thinking that the present value of the greater part of our forests does not justify the large outlay necessary for a thorough organization, few would wish to deny, and the object of these remarks is merely to draw attention to what appear to be rather important mistakes in his paper on forest organization.

JANGALI BULBUL.

* To the above argument may be added, that working plans are not made for ever, but that under any circumstances periodical revisions, say every 5 or 10 years, must take place.—THE EDITOR.

Castilloa elastica and the Western Ghaut Forests.

In the interesting account of this tree in the last number of the "Indian Forester," the low forests about Coimbatore and the base of the Neilgherry hills are recommended as the locality in India, where it is perhaps most likely to succeed. Were the writer acquainted with the line of Ghaut forests extending from there northwards as far, say, as the Nagar Division of Mysore, we feel confident, after a careful perusal of his notes, that he would place his finger on this region as the most likely to constitute a new habitat for his species. Alter the names, and his description of the climate, soil, and general surroundings of the forests where his caoutchouc tree grows will exactly suit that of the lower valleys of the Ghaut range. Indeed, looking at the map of the world with our knowledge of winds and rain in the tropics, were it otherwise a very fertile brain would be required to strike out a plausible explanation of the fact. As it is we know from the general accounts of travellers that there is a very striking resemblance between the two regions. Where the difference lies, and that a great one, is in the two floras. In the ordinary course of things there can be no doubt about one's ability to grow Castilloa elastica in the lower Ghaut valleys, but the point which nothing but experiment on the spot can determine is, whether in this tract of teeming fertility and bewildering wealth of species, it can so far intrude on the closely fitting vegetative economy as to conquer an independent position in the forest flora. Most probably it would require some artificial aid to maintain itself, but if its economic value is anything like that stated, this we can afford to give it. Only to a limited extent though, for the same poisonous climate exists here as in the tree's new world habitat. Up to this limit great facilities for working exist. The region we are speaking of is permanently inhabited by aboriginal tribes, who sometimes settle down into villages in healthy localities, at other times retire to the most lonely and malarious portions of the belt where they seem to be dying out, and who sometimes can be depended on for regular work, at other times not. With or without their aid, labor for a portion of the

year could be easily got from the settled and healthy country above. Very often villages with surplus labor exist on spurs of the Ghauts almost overhanging the low country in a cool and non-malarious climate two or three thousand feet above the sea. Here the forest officer has his hut and rides up his pony after the day's work is done. Back here too he brings his fever-stricken coolies for a change of air better than any medicine. The whole forest region below is now pierced by easy Ghaut roads at intervals of about 50 miles—the ports of Mysore as the talented engineer who made most of those in that province has aptly described them. All the most accessible passes are lined by a dusty streak along which the produce of the up-country passes to the sea. In a word in the lower Ghaut forests we can offer Castilloa elastica a habitat quite as unhealthy as its own in America, and an amount of care and culture it could not get there.

It is passing strange that during these last eight or ten years the forest administrations of Wynaad, Coorg, and Mysore have left their finest belt of forest so little worked. Occasionally a forest officer visits it, and if he is not "one of your practical men," or has a soul a little above his dinner, goes back with his head full of the grandeur of nature, and still grander schemes of economical utilization. He sees towering trees such as grow nowhere else between the two seas. Ebony slowly rotting at his feet. He sees minor forest produce, cardamoms, gamboge, wood-oil, cinnamon oil, resins, gums, &c., going to waste and untouched, save by an occasional pilfering wretch from below or an astute "Gonda" from above. Eating his breakfast in the cool vaulted shade, he ponders over these things and tries to work out an analogy with matters at home. Impossible. Everything here occurring there would be turned into gold, but against his attempting any such alchemy, several obstacles stand in the way, and the first of these is the greatest. How is he to get timber off those steep hill sides into the sluggish floatable rivers of the low country? The elephant is an intelligent and powerful beast, and besides exists on the spot in an unregenerate state, but it cannot work on a crumbling foothold dropping down at an angle of 40.° He thinks

perhaps of the Schlitteurs of the Vosges. They also are wonderful animals, and on the whole may be considered to beat the elephant at their special work, but then they are not here, and were they, could not work in this climate. No—Negroes are the only men on our globe who might, but Wilberforce did much to deteriorate their physique. Timber slides, of which his northern brethren have sent him several pictures, constructed as feeders to the Ghaut roads, seem in the end all that is practical. At the base of the system, of which each of the Ghaut roads would thus become the trunk, a little cheap waterpower saw-mill of the kind so common in France might be constructed, and orders for timber in scantling received from *above*, for there, for many years to come, is the market the Ghaut forests ought to supply.

Speaking now only of Mysore, there may be observed in this year's budget a certain parsimonious dealing out of funds for keeping fires out of the dry forests of the plateau. Certainly, they want improvement, and one must be thankful for small mercies. No great success has hitherto attended efforts made in this direction, and to do the work thoroughly a great deal of money will have to be spent. Those who have the care of the public purse strings have, whether wisely or not is at least an open question, regarded roads and irrigation as a more profitable investment than forests. They may possibly hold up their hands when the little bill for the entire banishment of fire from the deciduous forests is submitted, and ask questions which one would like to be able to meet with figures. Few foresters now-a-days, save perhaps the "old Shikaree" type, care to incur the odium of saying a word for forest fires, but in "Kad-handi's" humble opinion their uncompromising opponents have gone too far in many cases. Almost every forest naturally requires to be protected in the blocks undergoing reproduction, but beyond this it is not absolutely necessary, is often of small utility, and conceivably may cost a good deal more than it is worth. He would much wish to see each case considered on its own merits, and on this account, and indeed on every other forest consideration, he will never cease to re-echo the now almost hopeless cry for working plans. The

forest survey branch, he has heard it said, will, at the present rate of progess, be ready in about fifty years to survey his forests. Be it noted that good native surveyors can be had on the spot for Rs. 50 per mensem. He would imagine too-untutored beast—that a man picked out by competition, subsequently trained as forest assistants now are, and after years of residence in and study of any particular class of forest—he thinks (we say it with all submission) that this man would be the most fit and proper person to draught a working plan for those forests. No nicely balanced calculations equalizing supply and demand are called for. No one knows yet, nor can know for a very long time to come, either what our forests can yield, or what they are wanted to yield, but we should much like to see such burning questions as the working or abandonment of the ghaut forests, the partial or complete protection from fire of those on the plateau, the reproduction either natural or artificial which both require, forest rights, &c., discussed, and action taken on some definite individual basis. General principles are often impracticable of application to the last degree. Kad-handi remembers, when grunting over his acorns in the forests of fair France, that several portions of them had suffered from a two rigid adherence in the old days to broad ideas. Various ordonnances emanated from Paris, wise in themselves, but nevertheless hurtful when applied in numberless individual instances.

Talking about forest fires we have got into a digression. What we ought to have said more briefly is that the funds required for protecting the dry forests from fire may on comparison be found far to exceed what would be required to put a portion of the evergreen forests into working order, and that if money for forest purposes is to continue as scarce as it has been, it should in preference be spent where it will yield the quickest return, *i. e.*, in a rational working of the Ghaut forests. They want no firepaths, nor are they burdened with any rights. Their's is *par excellence* a tree, growing climate and nothing else, in fact just the reverse of the eastern districts about Bangalore, which are eminently adapted for cereals, but where there at least exists a

doubt whether trees of large dimensions will ever be got to grow satisfactorily. It is not against physiology to argue that a shortlived rainfall, admirably adapted to agricultural operations while it lasted, would yet seriously militate against the production of trees whose transpiration, other things being equal, varies with their size and the dryness of the air in which their foliage is bathed. The various hardy species put down and deeply rooted in large pits will doubtless grow and keep up appearances, but under the conditions, assimilation and metastasis can go on but slowly, and on them depends the bulk of woody matter to be produced. It would be of great interest to be able to compare the yearly increment per acre in these plantations with a similar acre in the Ghaut forests, or indeed anywhere west where the rainfall is heavier and better spread out. Buchanan who travelled through the country shortly after it fell into the hands of the British gives but a poor account of the tracts of *primitive* eastern forest, and he was a careful observer and most minute recorder. If these things be so, when the Mysore State Railway comes to be made, its fuel will be found growing at the wrong end. This innate tree—growing capability of the Ghaut region would have to be met by vigourous "coupes de netoiement," for about two-thirds of the existing species, unless injected, would be useless for building purposes, and furthermore one would naturally aim at the introduction of first class species, such as mahogony (Swietenia mahogoni) and several others of that family—Cedrelaceæ. Then there is Haematoxylon campechianum, the log-wood tree, so successfully introduced into the low hot moist forests of Jamaica. These and many more have an assured market and would pay carriage to Europe, particularly as from all accounts the old sources of supply are being exhausted. It is doubtful, whether teak could be economically grown in the strictly Ghaut region, and there is no particular necessity for attempting it. As far as the writer's limited experience of this valuable tree goes, it seems to require a winking of dry weather which it would not get there. Nevertheless, teak plantations have succeeded in Burmah in localities answering to the description of our lower evergreen forests, while on the

other hand a teak plantation at the foot of the Coorg ghaut has had to be abandoned.

So much for the accessible portion of the Ghaut region, from which timber could be got out by a little expenditure on slides and forest roads. Away from the trunk roads and the valleys abutting on them, there is nothing for it but to fall back on minor forest produce and work for that; favoring private enterprise wherever possible, but here for several reasons very cautiously. It is a question whether the existent minor forest produce could not profitably be more extensively worked: it is certain that the successful introduction of Castilloa elastica would unmistakeably turn the scale in the right direction. We would not however have it thought that we staked bringing down the trembling beam on this one species. Many others will occur to everybody, but Castilloa elastica seems to open up a fairer prospect than them all. There is our old, now familiar, friend Ficus elastica, which seems likely to grow well enough here, provided we kept down hardier native species, probably it would require a good deal of aid in this way. There is also Hevea elastica which has, we believe, for some time since been in Dr. King's hands, and in fact the whole series of caoutchouc yielding trees, not forgetting the wonderful Burmese climber, Cuavannesia esculenta. Since however Castilloa elastica admittedly produces the finest India rubber, one would naturally wish to begin by trying that. Considering the inaccessibility and unhealthiness of the lower Ghaut forests, we seem to have a case here of what our forefathers would have described as a providential adaptation of ways to means, in the fact that the locality is nevertheless so well fitted to produce an article, so necessary in the arts, and of such a growing application as caoutchouc. What we have to determine now is the best species to do it with.

It has been urged that vanilla should be planted in the Ghaut forests, and that from what is known of its artificial cultivation in Bangalore, it might grow well there almost naturally, but against this it may be said that its production does not seem to fall within the legitimate sphere of the forest department. It is simply a horticultural product like cabbages or

greens. There is no long rotation obscuring the action of the ordinary laws of supply and demand, nor is it connected with general forestal considerations except from the fact that it *might* become a valuable article of minor forest produce and lift an otherwise unworkable forest into a position of solvency—a kind office similar to that performed by Truffles for the oak forests of Southern France. We have said "might," for its value seems too much at the mercy of chemistry to be safely speculated on. Efforts might be made to introduce its cultivation among the villagers of the West, holders of patches of coffee and garden land. Unfortunately, professional gardeners scarcely exist out of Bangalore, and some one slightly acquainted with the subject, in the absence of insect aid, seems to be always necessary in India, where the plant has hitherto been grown.

KAD-HANDI.*

---

* Kad-handi, we understand, means "jungle pig," which in itself is not a very aristocratic *nom de plume*; we are, however, glad to see that *our* Kad-handi is evidently of a very cheerful disposition.—THE EDITOR.

II. Reviews.

Report on the Forest Administration in the several Provinces under the Government of India, with a Review by the Inspector-General of Forests, 1873-74.

It is rather late in the day to publish now the above volume. More than two years have gone by since the close of the official year of 1873-74, and consequently much of interest at the time has become comparatively valueless now. The reason of the delay is, if we are rightly informed, to be found in the fact, that the work of the Inspector-General of Forests is more than can reasonably be expected to be got through by one man. If this is correct, the sooner a Personal Assistant to the Inspector-General is appointed, the better.* Or a still better plan would be to carry out the suggestion made by the Allahabad Conference of 1873, which was to the effect that, instead of one man at the head of the Forest Department, there should be a board of say three, of which the Inspector-General should be President, whereas the other two members might be styled "Deputy Inspector-General of Forests." To carry this suggestion into effect would not be quite so expensive, as it might appear at first, because as an offset the post of Superintendent of the Survey and Working Plan Branch could be abolished, and there would be no necessity for appointing a Personal Assistant to the Inspector-General. Moreover, as matters stand at present, great inconvenience is experienced during the absence from head-quarters of the Inspector-General of Forests, whereas, under the proposed system, he would be able to remain at head-quarters throughout the year, while the two Deputy Inspector-Generals would go on tour during, say, six months of the year; or one of the Deputies would remain at head-quarters while the Inspector-General went on tour. During the six

* This have been done, since the above was written.—The Editor.

months of recess the three officers would form themselves into a Board, and dispose of all important professional questions which may come before them.

However we have wandered from our subject. Trusting that the Report for 1874-75 will soon be published, we shall make only a few short remarks on that of 1873-74.

I.—Reserved and leased forests.

Area.—From the review by the Inspector-General of Forests it appears that the following figures represent the areas of reserved and leased forests.—

PROVINCES.	Reserves.	Leased Forests.	Total.	REMARKS.
British—				
1. Bengal ...	119	.....	119	
2. North-West ...	1,210*	.....†	1,210	
3. Punjab ...	3,700	196‡	3,896	
4. Oudh ...	823	.....	823	* Open to correction.
5. Central Provinces	1,902	.....	1,902	† Leased forests in Native Garhwal not demarcated.
6. Burma ...	279	.....	279	‡ Includes 80 square miles in Bussahir erroneously entered as demarcated.
7. Assam ...	318	.....	318	
8. Coorg ...	375	.....	375	
9. Ajmere ...	.....	.....	.....	
Not British—				
10. Mysore ...	449	.....	449	
11. Berar ...	632	.....	632	
Total ...	9,807	196	10,003	

In none of the provinces had the work of demarcation been completed, and in Bengal and Burma it had only been commenced. In Bengal large additions have been made since,

bringing the area up to 2,500 square miles, and in Burma the system on which the reserves are to be selected has, we believe, at last been decided on, so that there, too, good progress will soon be shown.

Improvement of reserves.—Until the demarcation work has been completed, it is hardly fair to expect that much progress under this heading should be made. In fact, the best plan is to concentrate all efforts to the former, and then to proceed in a systematic manner to the latter. In most provinces, however, a beginning has been made to keep shifting cultivation out of the reserves, and in Burma arrangements have been come to with the Karens to cut toungyahs on condition that they are planted up with teak. The latter system has much in its favor theoretically, but whether it will be found possible to arrange and control the practical working, so as to lead to the desired results, has yet to be seen.

In some parts of India restrictions in the way of cutting have led to beneficial results by improving the cover overhead, still more needed in tropical forests, than elsewhere. In this direction the Dehra Dhoon forests are specially mentioned, although the same refers probably to many others which are not mentioned.

Creeper cutting is being attended to in many parts of India, and this is a measure of great importance, in fact arrangements should be made, wherever necessary and practicable, to cut the creepers periodically, a plan followed in the sub-Himalayan forests of Bengal.

Protection from fire.—The custom of firing the jungle is a common practice with Indian tribes, and the Forest Department may be proud in showing, that during the year 1873-74 some 6,33,682 acres of reserves have been protected from fire. Such a result has not been achieved at once, in fact it is the reward for 10 years' labor, and hard labor too. It was in 1864 when the first successful attempts were made by Colonel Pearson, then Conservator of Forests in the Central Provinces, by protecting the Bori forest, measuring 23,680 acres; and since then operations have spread gradually, so that in the year under

review, the areas protected in the different provinces stood as follows :—

PROVINCES.	Acres.	Total outlay.	Commencement of fire conservancy.
		Rs.	
1. Bengal	7,680	198	1872
2. North-Western Provinces...	74,306	2,152	.....
3. Oudh	12,800	275	1871
4. Central Provinces ...	1,33,460	35,687	1864
5. Burma	45,196	10,284	.....
6. Assam	11,520	92	1872
7. Mysore	11,520	.....	.....
8. Berar	3.37,200	1,687	1870
Total ...	6,33,682	50,375	.....

The difficulty in keeping out fires differs greatly according to circumstances. In the Punjab no special measures at all are necessary, because jungle fires are of very rare occurrence. In the hills of the North-Western Provinces the difficulties are light; somewhat heavier they become in the Berars and in the Central Provinces, but they are really formidable in the sub-Himalayan forests of Bengal, and in parts of Assam outside the evergreen tracts. Here most of the endeavours have failed, owing to the force of the fires running from outside towards the protected areas. Very often a fire path of 200 feet breadth is no protection, and what is worse, burning leaves are carried so rapidly into the middle of the protected areas, and fires spread in so short a time under a strong wind, that often all human efforts are of no avail; hence it will be very difficult to show as favorable results in Bengal, Assam, and parts of Burma, Oudh, and North-Western Provinces, as in the Central Provinces or the Berars.

Plantations.—The following table exhibits the area planted and the cost :—

PROVINCES.	Area at the commencement of the year	Area added during the year.	Area excluded during the year.	Area at the close of the year.	Previous cost.	Outlay during the year.	Total outlay	Average cost per acre.
					Rs	Rs	Rs	Rs.
Bengal ...	605	72	28	649	14,345	8,257	22,602	35
N W. Provinces	700	129		829	12,412	3,631	16,043	19
Punjab ...	21,970	1,452½	7,872	15,550½	5,30,675	72,448	6,03,123	39
Oudh ..	180	...		180	3,382	2,713	6,095	34
Central Provinces	288	13		301	46,720	389	47,109	157
British Burma .	2,024	213	..	2,237	1,38,320	30,333	1,68,653	75
Mysore .	1,008½	450½	..	1,459	32,674	18,803	51,477	35
Coorg .	416	10	.	426	15,422	4,843	20,265	48
Assam	17	257	.	274	1,855	5,118	6,973	25
Berar .	721	539	.	1,260	11,139	4,910	16,049	13
Ajmere ..		..	.	.	. .	.		.
Total	27,929½	3,136	7,900	23,165½	8,06,944	1,51,445	9,58,389	41

It will be seen that the area at the commencement of the year is larger by 4,764 acres than the area planted out at the end of the year, in spite of 3,136 acres planted out during the year. This has been caused by the abandonment of 28 acres in Bengal, and 7,872 acres in the Punjab, which may be considered equivalent to the acknowledgment of previous mistakes. Though not a very gratifying operation, it is right to admit openly mistakes made, and thus to avoid similar occurrences with more success in the future.

With few exceptions planting operation in India appear to us of a somewhat sombre appearance, and we are not sure, in how far the area given as planted out, represents the real success in this direction. In Bengal, for instance, the greater part of the area is stocked with India rubber, or with teak in localities situated beyond the northern limit of that tree, and what the final results will be, financially, is very difficult to say. So

much appears to become more and more established, that the Ficus elastica will stand not nearly so much tapping, as was supposed some time ago. In some of the natural localities three good, but not excessive, tappings have killed many trees of huge dimensions.

In the Punjab 7,872 acres have been struck off the area statement, as mentioned above, and it would be interesting to know, whether in other provinces not areas of a similar description are included in the area given, or whether they are really in a better position in that respect?

The average expenditure per acre of all provinces amounts to Rs. 41, which is certainly a high figure, and it appears called for to enquire, whether not better results might be achieved by spending the money on our natural forests? At any rate, where sal forests are in the question, it would pay ten times better to spend the money on their improvement, than to establish plantations of exotic trees. On the other hand, where new forests are to be created, or where the marketable trees are thinly scattered over extensive acres, as for instance in Burma, concentrated plantations may be indicated. On the whole, we agree with Dr. Brandis when he says:—"In some cases plantations on a large scale are necessary, even at the present high rate of expenditure, to ensure a sufficient future yield of wood and timber, but, as a rule, and for a considerable time to come, the regeneration of the forests in the reserves must be effected by self-sown seedlings, or in coppice woods by reproduction from stools. Plantations, however, on a small scale, are necessary in all forest districts, to increase our knowledge of the mode of growth and the requirements of the principal trees which compose our forests."

To this we should add one word more, and that is, that, instead of taking up planting operations as separate schemes, they should, in the generality of cases, form part of the working plans under which our natural forests are treated.

Forest Survey.—The Survey and Working Plan Branch of the Forest Department has been at work in the Dehra Dhoon

during the year, and with an expenditure of Rs. 50,272 the following amount of work has been accomplished :—

Plane tabling completed ...	144½ Square miles.		
" " partly done ...	15¼ " "		
Total			159¾ Square miles.
Boundary traversing with theodolite computed	22 miles.		
Boundary traversing with theodolite not computed	280 "		
		302	miles.
Interior traversing by theodolite, prismatic compass, or card protractor computed, and closing points interpolated ...	225 miles.		
Interior traversing not computed	99 "		
" " plotted by angles	180 "		
		534	miles.
Total		836	miles.

Besides the above, the topography of some detached forests has been completed, and the western end of the Siwalik range topographically surveyed; 10 pucka bench marks were erected on trigonometrical stations, 290 sheets of Mr. Reynold's Hazara map colored, and during the recess of 1873 the whole party began the survey of the station of Dehra, which was, however, not completed, but made over to the regular Survey Department.

So far the Survey Branch. The Inspector-General then mentions :—"At the same time surveys were undertaken and forest maps prepared, as the work required them, by the local Forest officers in Bengal and other provinces. Data were also collected by the local staff in these provinces for the framing of preliminary working plans, and valuation surveys were made for the same purpose."

Much has been said and written of late years about the Special Survey and Working Plan Branch,* and no doubt

* Amongst others, see Report on the Proceedings of the Forest Conference held at Allahabad 15th to 19th January 1874, pages 105 to 107; and Mr. Amory's paper, Indian Forester, Volume I, pages 386 to 393.

deservedly so, because in its present constitution it certainly is not what is wanted at this moment.

As now constituted, the Special Branch does only survey work at a high rate of expenditure, whereas the survey of a forest is only a preliminary step towards the framing of a working plan. But the latter is just what is wanted, and urgently so, for our Indian forests. If we were to wait until all our forests have been surveyed at the present rate of speed of the Special Branch, and to work on in the dark in the meantime, the probable result would be, that by that time no forests are left, for which working plans could be prepared. The survey of, and the preparation of maps for, our forests is certainly the correct thing; but in most cases the general Survey Department has done the work for us, at any rate so far as to give us skeleton maps, in which the Forest officer can fill in all details required in the first instance for a working plan in a comparatively short time and at a very low rate of expenditure. After all forests have thus been provided with preliminary working plans, it would be quite time enough to think of a more detailed survey. And even when that time has come, it will be a matter for discussion, whether the forest surveys should be executed by a Special Branch of the Department, or whether they had not far better be done by the regular Survey Department. We are inclined to side with the latter view.

From the above we conclude, that the creation of the Special Survey Branch in its present constitution was, to say the least of it, premature, and in the interest of the forests we add, that the sooner it is broken up, or at any rate its constitution altered, the better. The change, if made, should be in this direction:—"All original surveys of natural forests (few cases excepted) should be stopped, and instead skeleton maps prepared from existing surveys, and based on them preliminary working plans drawn up." This is precisely the system followed in Bengal, and with some modifications in a few other provinces. Besides, there is yet so much to be done in the way of demarcation and settling of forest rights that the Rs. 50,000, which the Special Survey Branch costs per annum, could be spent to far greater advantage on those branches of forest work.

II.—Unreserved forests.

It has not been attempted to estimate the area of the unreserved or district forests, but it is very large in Burma, Assam, Bengal and Central Provinces, on the other hand very limited in the Punjab and parts of the North-Western Provinces, and there are none at all in Oudh.

The unreserved forests are partly under the control of the Forest Depertment, but in the generality of cases under that of the District officers. On the whole, it cannot be said that they receive a very careful treatment, as up to date their chief object has been considered to be the yield of revenue. In fact, in several provinces the department would work with a deficit, if it was not for the revenue derived from the unreserved forests.

III.—Yield and financial results.

It is very unfortunate that no data to show the yield of the forests are available, and this fact in itself shows how very far we are as yet removed from a systematic or reasonable mode of management. To go on spending Rs. 50,000 per annum on the mere mechanical survey of the Dehra Dhoon forests, and to work on in the dark the whole mass of forests, without the least idea, not only of what the forests can stand permanently, but even how much is actually taken out of them, are facts which must convince any one, how just the remarks are, which we have made under the head of Forest Survey; and we herewith appeal most earnestly to those at the head of affairs to consider the matter most seriously.

To ascertain what is taken out of the unreserved forests per annum is a very difficult task, which will probably not be accomplished for some time to come, but we are entitled to demand that it should be ascertained and recorded year after year, what quantity of material, and of what quality, is removed from the reserved forests, which are destined to form the State Domains hereafter.

The following table contains a summary of the financial results of the year :—

PROVINCES.	Revenue.	Expenditure.	Surplus.	Deficit.	Percentage of surplus as compared with revenue.
	Rs.	Rs.	Rs.	Rs.	Per cent.
Bengal	1,16,633	85,488	31,145	...	27
North-Western Provinces	16,29,496	9,66,506	6,62,990	...	41
Punjab	7,32,540	5,97,162	1,35,378	...	18
Oudh	3,03,181	1,99,434	1,03,747	...	34
Central Provinces ...	5,68,367	2,83,556	2,84,811	...	50
Burma	10,68,621	4,74,531	5,94,090	...	56
Mysore	4.97,060	2,36,233	2,60,827	...	52
Coorg	1,10,079	34,709	75,370	...	68
Berar	2,63,256	85,640	1,77,616	...	67
Assam	62,726	50,622	12,104	...	19
Ajmere	508	24,340	...	23,832	.....
Survey Branch ...	...	50,272	...	50,272	.....
Total ...	53,52,467	30,88,493	22,63,974	...	42

At pages 408 to 411 of Volume I of the Indian Forester it has been shown, that the figures, as exhibited at present, are comparatively meaningless, beyond showing the actual receipts and expenditure, and we need not discuss them any further here.

The Inspector-General's review concludes with a Financial Retrospect for the whole of India, from which we extract the following figures:—

Year.	Revenue.	Expenditure.	Surplus.	Percentage of surplus as compared with revenue.
	Rs.	Rs.	Rs.	Per cent.
1864-65 ...	38,17,819	18,86,364	19,31,455	51
1865-66 ...	39,18,413	22,32,720	16,85,693	43
1866-67 ...	33,53,777	21,20,171	12,33,606	37
1867-68 ...	37,79,342	23,40,733	14,38,609	38
1868-69 ...	46,36,769	27,21,514	19,15,255	41
1869-70 ...	50,21,652	32,83,445	17,38,207	35
1870-71 ...	51,67,799	39,74,097	11,93,702	23
1871-72 ...	54,81,754	37,42,133	17,39,621	32
1872-73 ...	63,36,766	41,72,111	21,64,655	34
1873-74 ...	70,04,751	41,47,214	28,57,537	41

These figures exhibit the following important facts :—

1*st*.—That the revenue has nearly doubled during the last ten years.

2nd.—That the expenditure has more than doubled.

3rd.—That the surplus has not kept pace with the increase in the revenue, having fallen from 51 per cent. of the revenue in 1864-65, to 41 per cent. in 1873-74. It is difficult to say, whether the comparative deficiency of surplus is compensated for by a corresponding improvement in the productive power of our forests.

Sw.

Transactions of the Scottish Arboricultural Society, Vol. VIII, Part I, edited by John Sadler, F. R. Ph. S.

It is impossible, after reading this volume of Transactions, not to notice the great difference between Arboriculture and Forestry; it is only too apparent in the headings of the different articles; and after reading Dr. Balfour's address, we cannot help being struck with the pertinacious way in which the advantages of Forest Education in Scotland for Indian Forest officers are advocated by Scotch professors, Scotch societies, and Scotch practical arboriculturists. Dr. Balfour's description of the course of education in a Forest School, "where draining, planting, thinning, pruning, felling, drying, and transportation could be practised," shows sufficiently well how narrow is the Scotch idea of the work really to be done in India, when such important elements as "natural reproduction" and "working plans," &c., are omitted from his curriculum.

Dr. Balfour says:—"I believe that the requisite instruction for candidates for the Forest Departments in India and our colonies could be acquired in this country, if Government took up the matter and called in the aid of the Scottish Arboricultural Society." We suppose that by this Dr. Balfour means that the examination for first appointments in the Indian Forest Department should be held after passing through a course of instruction in Edinburgh; and we would point out that the effect of such a system would be that the Department would chiefly be recruited with Scotch practical foresters of a class rather different to that of the students selected under present arrangements. The question whether such a thing is desirable we cannot now dis-

cuss in such a short review, but we sincerely hope that Dr. Balfour's views will not be taken up by Government.

Numbers of subjects connected with Arboriculture are touched on in Dr. Balfour's address which gives some interesting details on the destruction of forests and the consequent necessity for the establishment of forest conservancy measures in Australia, New Zealand, the United States of America, and Japan. It notes also that more attention is being paid in England to the planting of trees in towns and cities; and mentions that investigations made in London prove that a very small amount of sulphurous and hydrochloric acid in the atmosphere—even so little as $\frac{1}{1000}$ th part—injured the leaves of trees and caused them to fall off. The disease of the larch, the influence of the seabreeze in plantations, dry rot and the means of preventing it, the preservation of timber, the damage done to plantations by insects, are all remarked on and are recommended as subjects of investigation.

The most interesting of the nine papers on different subjects is that on "Arboriculture in Hampshire," though it is somewhat disappointing to find that the private woods in that county, as indeed is the case over the whole of the more or less wooded counties of Kent, Sussex (the Weald), Surrey, and Hampshire, are almost entirely grown to supply small industries in firewood and not timber. The writer says in his conluding remarks :—"The intelligent forester will have gathered from the preceding remarks that the future prospects of the woods and plantations at Hampshire are, on the whole, unsatisfactory, particularly in districts where underwood is in good demand at remunerative prices." It seems that there is a very large demand in Hampshire for small wood for such purposes as hoppoles, sheepbundles, brushes, rakes, and bobbins; and above all for firewood. The chief trees grown for these purposes are the alder, hazel, ash, and Spanish chestnut, all grown in coppice, with a rotation of nine to ten years. Larch is also much grown as a small tree to supply hoppoles; and we agree perfectly with the author in his deprecation of the system of growing larch instead of Scotch fir in barren wastes that it is proposed to reclaim. To recapitulate all the interesting points of Mr.

Peebles' paper would take too long, and we will merely notice that his chief object is to point out the mistake made in the south of England by private owners of forest in growing small coppice instead of high forest. To illustrate his statements he gives a table showing the comparative revenue to be derived from an acre of alder coppice, and larch plantation respectively, which we reproduce. Mr. Peebles says this is based on actual profits after deducting cost of management.

1 A. Alder Coppice.					1 A. Larch Plantation.		
At	11	years.	1st cutting	£18	1st thinning	...	*Nil.*
„	20	„	2nd „	„ 23	2nd & 3rd „	...	£15
„	29	„	3rd „	„ 23	4th & 5th „	...	„ 25
„	38	„	4th „	„ 21	6th & 7th „	...	„ 50
„	47	„	5th „	„ 20	8th & 9th „	...	„ 75
„	56	„	6th „	„ 18	10th „	...	„ 85
„	65	„	7th „	„ 17	Final cutting	...	„170
			Total	£140			£420

or three to one in favor of the larch. To us in India, these returns certainly appear enormous, but of course we are bound to accept the figures as they are expressly said to be "actuals." It is not stated in what particular years the thinnings take place, but assuming them to take place in the particular years placed opposite them in the table, and calculating the present value of the yield of each kind of forest at compound interest, we get the following data :—

	Alder Coppice.	Larch Plantation.
Present value at 3 per cent.	£53	£95
„ „ „ 4 „ „	„ 41	„ 61
„ „ „ 5 „ „	„ 32	„ 40

a very different thing to the one to three obtained by simple addition of receipts by the author.

Mr. Hutton's paper on planting sandhills gives some interesting details of this system of reclaiming sands which are liable to drift by using bent grass and broom, sowing the seeds of the latter with brushwood, to prevent the sand being drifted away, and then planting Scotch fir, which seems to come up admirably with the shelter of the broom.

The paper on "pruning in relation to the production of timber" is an imaginary dialogue between a proprietor and his forester with the object of proving that fore shortening and not close-pruning should always be practised. With this we disagree; and would point out that, in the chief example given (page 57) of the wounds made by close pruning having bled severely, the operation had been made on March 13th, the very season when it should not have been done. Had it been done in autumn, we suspect the forester of the dialogue would not have had his example.

Paper VI. is on the best age for felling different timber trees so as to get the maximum amount of material consistent with the best prices. As it may be interesting we give the ages at which he arrives for the most important trees:—

Oak ...	... 100 years.	Larch ...	... 65 years.
Beech ...	... 70 „	Scotch fir ...	... 60 „
Scotch Elm	... 80 „	Spruce ...	... 50 „
English „	... 100 „	Silver fir ...	... 75 „
Maple ...	... 120 „		

The other kinds mentioned seem to be only grown for small wood industries, and consequently we have the age for felling Spanish Chestnut and Alder placed at 35, Birch and Ash at 30 only.

Paper No. IX. compares the system of sale of timber standing or in log with that of working it up on the spot by home agency and selling in scantlings adapted for the markets of the locality. This is a paper which will be of interest to Indian foresters, as the subject is one which has been much discussed, and on the whole we are inclined to agree with Mr. McKenzie in his preference for working up his own timber, and sending it to the most profitable market. This preference is not a matter of theory as he states that, "on different occasions I have exposed standing timber for sale, and the price offered was so very low, according to my estimate, that I was induced to buy machinery and manufacture the wood, when I realized profits of from 18 to 110 per cent. over the value of the highest offer."

From Mr. McKenzie's account *sleepers* seem to be the most profitable description of worked-up timber, and the chief markets to be Sunderland and Hartlepool.

In the paper on the failure of the Larch in Scotland, it seems conclusively proved that the diseases have chiefly sprung from the injudicious selection of planting sites.

In conclusion, we will merely refer to paper VIII. "on the age of trees," as it is a subject of the greatest interest and importance. Here in India it is very difficult to ascertain the age of many of our trees, for example, "Sal," but it would be absurd on that account to give up endeavouring to get some data to go upon in the preparation of our working plans. Most of the hill trees of India have annual layers which are easy to count, and it is not difficult to make out those of many of the plains trees such as Teak, Toon, or Sissu. If every officer, who has charge of felling works, or who has many chances of inspecting newly felled trees, would make notes and measurements of the annual rings, noting details of aspect, soil, and style of growth; and publish them, we might soon have a mass of most valuable data for our working plans. This is already done to some extent in most provinces. We may here extract a note on the method followed by DeCandolle:—"Whenever I meet with a clean cut of an old tree," says the professor, "which is sufficiently sound to enable me to discover its layers, I place a slip of paper on the branch from the centre to the circumference; on it I mark with a pencil or pen the junction of each zone, noting the side of the pith, of the bark, the name of the tree, its native country, and the particular observations which it has suggested. The collection of these slips, not unlike those in the shops of tailors, gives me an exact appreciation of the growth of trees, and the means of comparing them. I am in the practice of marking in a more striking manner the lines which indicate the tens of years, and also of measuring the width from tenth to tenth. My measure being taken from the centre to the circumference, gives me the radius."

J. S. G.

Remarks on the Review of Mr. Amery's Notes on Forestry (Vol. I., page 397.)

In the above, Muhafiz-i-jangal (whatever that may mean) says :—"We suspect Mr. Amery judges of the growth of self-sown seedlings from his experience of nursery plants, or perhaps he has in view the *fabulous* growth of the Casuarina equisetifolia reported from the Madras Presidency, which however is still an *exotic*." Why fabulous and why an exotic? The rapid growth of the tree is a matter of every day observation, especially about the town of Madras and no more admits of doubt than the existence of Fort St. George itself. In Southern India Casuarina is the forester's great stand-by, whenever a fast growing hard timber is wanted and a loose soil with a little moisture exists to grow it on. This leads to the consideration of the second assertion which can only be propped up by a maintenance of the most extreme views with regard to acclimatization, or to speak more correctly, lasting introduction, namely, that a permanently introduced species must at once take a prominent and independent position in the new country's flora, like the American Water-weed in English canals or the Australian Wattle on the Neilgherries. Accepting any definition short of this, C. equisetifolia is not an exotic. Though we cannot positively assert that natural reproduction may be reckoned on in a Casuarina plantation we have good grounds for believing it, at least in the ordinary climate of the Mysore plateau beyond which our observations have not extended. In the Bangalore plantations it has been planted pure, which will test the point crucially, the more so as the rainfall seems to be very irregular in most of them. It is certain that in Mysore generally the tree seeds plentifully and produces a crop of seedlings wherever the ground is in a fit state to raise them. Hardihood is a test of successful introduction, and here no arborial species can surpass it over so large an area. Growing magnificently along the sandy shore of the Madras coast, it is quite at home and makes excellent growth on the hard loams and inland climate of Eastern Mysore, whence it extends West, with its graceful pine-like foliage, in a country where no

Conifers are, into a damp climate, where few of its late companion species can follow it. At Ootacamund, with a mean yearly temperature a few degrees above that of London, the same wonderful tree turns up again. Is it then "still an exotic?"

KAD-HANDI.

TO THE EDITOR OF THE "INDIAN FORESTER."

DEAR SIR,—I have long been expecting a thunderbolt like Muhafiz-i-jangal's review of Mr. Amery's book, and I heartily agree with Muhafiz, that it was a thousand pities it was published in its crude state. In the note on the review, however, you say "we must not waste our time in attempting to write general hand-books on Forestry." Is it a waste of time? As Mr. Amery very truly says (at page 7 of his book,) it is not every one, even if he were a master of French or German, who would care to wade through all the details which refer exclusively to Europe, in order to arrive at the broad principles of forestry which apply to the whole world. The value of a knowledge of this general scheme of forestry, to our untrained foresters, has been recognised (for Government are willing to pay the expenses of any untrained forester who will devote his leisure during furlough to studying on the Continent,) and therefore needs no further remark. But I believe to Revenue and other officers also this knowledge, if procurable, would be of great value. I have heard Forest officers complain of the lukewarmness, and even opposition of Revenue officers in forest matters. Be this as it may elsewhere, the ryotwari system of this side of India has this great advantage, that it brings home to Revenue officers (in their tours from village to village) the absolute necessity of some system of forest conservation, especially when their attention is in any way called to it. My experience is that they are, as a rule, most eager for some thing that shall check the rapidly growing scarcity of timber. But what is this something? Over and over again officers have asked me what are the broad principles of forestry? The theory which is to solve the problem "eat

your cake and have it". A book that would answer these questions which would set forth clearly and concisely the theory of forestry, in my opinion, so far from being a waste of time, would be a great boon. Mr. Ribbentrop's book is avowedly local and, moreover, Muhafiz, like myself, feels that the parts which are general are exactly those which are slurred over. If I am not mistaken, Muhafiz is himself, notwithstanding his disclaimer, quite qualified to compile such a treatise of the theory of Forestry and, if necessary, other trained forest officers would be very happy, I am sure, to lend him any notes they may have.

Muhafiz speaks slightingly of the picture on Mr. Amery's book-cover and calls it "extraordinary," but I think he has not realized its deep meaning. In order that a representation of an Indian scene shall be received as such in England one of three things must be portrayed in it, *viz*:—an elephant, a tiger, or a palm tree. Mr. Amery, by a masterpiece of ingenuity, has united all three in a space two inches by four.

Yours faithfully,

GHATI.

In spite of what our friend "Ghati" has said above, we must still adhere to what he objects to. It is of course out of the question that Mr. Amery intended to teach *European* foresters, what to do and how to do it, and it is equally clear that he referred to those interested in *Indian* forest management; hence we must repeat that it is waste of time attempting to lay down the general principles of forestry as they hold good in India. Forestry is an eminently empirical science, consequently its general principles must be derived from actual experience, and until we have a sufficient store of experience, it is of no use to attempt publishing a general hand-book on forestry as applicable to India. If the object is, on the other hand, to give the general principles of forestry as applied, say to Germany or France, it would be much better to translate one of the leading hand-books of those countries on the subject, or, if necessary, to translate extracts, rather than attempting a

book, which gives itself the appearance of being based on Indian experience, whereas in reality all the difficult points, on which Indian experience is wanting or was not at the disposal of Mr. Amery, have been most carefully passed over in silence.

THE EDITOR.

III. Notes and Queries.

A fragment from a German writer on the reasons why the State should manage forests.*

(Interspersed with some notes.)

"The principles on which forest science depends have been, even up to recent times, a standing difficulty with economists. Sylviculture and agriculture, which in some respects are closely connected, are governed by economic laws essentially different: principles having a firmly established application to the one, are only exceptionally applicable to the other. Those who urge that all agricultural lands should be in the hands of private individuals, are at the same time obliged to invoke the intervention of the State in the case of forests; and acknowledge the State's right of tutelage as superior even to the right of the proprietor. While they urge on the one hand that the State should dispose of all its culturable lands, they maintain on the other, that the public forests should always remain in its hands. And lastly, if it is desirable to see agricultural estates sub-divided up to a certain limit, it is preferable on the contrary to keep the forest estates as consolidated in extent as possible. I think that these exceptions are easily accounted for, and that they rest on a simple and general proposition of political economy; it is because other conditions being equal, forests represent a system of cultivation less intensive than that of other properties."

[Degree of intensity of cultivation is the amount of labor and money expended in a longer or shorter time, in proportion to the area. In agriculture *intensive* cultivation is the opposite of *extensive*. Garden cultivation is more intense than agricultural in most cases, and agricultural cultivation is more intense than forest cultivation. The more intense the cultivation the less is it suited to be conducted by the State. Private individuals can originate and carry out schemes at once, as the demand arises; they can quickly alter their plan of operations, transport at once their

* Communicated. The note contains one or two assertions, of which we do not quite approve.—The Editor.

products to the places where they are in demand for the moment with no hindrance or check. Government operations must proceed with a certain slowness and obedience to rules.*

It follows that while private individuals best occupy those spheres of production which demand rapid and unchecked action, the State best occupies those which demand the slow action of time, and which depend not on the momentary considerations of the immediate demand, but on a combination of considerations which often reach into the distant future, or extend to the indirect results of present action.]

"Forests, quite unlike agricultural property, are much better preserved by the State than by private owners. They demand comparatively a small amount of labor, and the operations necessary are uniform in character, so that the management of the State is not unsuited to their wants.

"The instructions which the Forest administration issue can only impart an apparent activity to the work, for it is impossible even for an intelligent forester to do much to hasten the growth of trees. It is only the lapse of time that can build up the forest capital; and it is because of this necessarily slow progress that the State is best fitted to manage forest estates. The treatment of forests for the production of high-timber is impossible to any one except the State; and consequently those forests are managed in the interests of society in general (*i.e.*, present and future), and not in the interest of immediate financial returns. Thus, for example, when the State forests are few in number, it becomes necessary that the surveillance over private forests, by reason of their climatic influence, should be more severe than when the State has a sufficient area of its own. The Government has the necessary right (by means of the principle of expropriation on payment of indemnity) of possessing itself of all forest lands, the preservation of which the interests of the public at large demand.

"The system of tenant-farming is never applicable to forests.

---

*. Ce qui dans toutes les industries donne à l'action individuelle une grande superiorité surl'action gouvernmentale, c'est l'e sprit de l'initiative qui la caractérisent.

"La mobilité des opérations, la multiplicité des transactions, la transformation des produits la rapidite de leur transport sur les points ou ils sout demandés, ne s'accomodent pas de la régularité et de la lenteur calculée des administrations publiques.—*J. Clavé, Etudes. sur L'economic Forestière, p.* 32.

[When a farmer makes over his land to a tenant to cultivate, he delivers nothing into his hand but the land, which the tenant cannot injure beyond a certain point; the tenant provides his own capital, which is to produce the fruits which he is to reap.] "If a forest were to be so given over, the proprietor would himself furnish the whole of the capital which is to yield the profit, *viz.*, he gives up into the hands of the tenant the standing trees. The temptation to the tenant to trench on the capital itself (which he has not had to furnish as in the other case,) and overcut the forest, is great, and it would be difficult to check him. He would be given a surveillance so severe, as to be tantamount to a direct management by the proprietor himself. Moreover, for forests, farming out to a tenant has not the same advantage as in the case of arable lands, because, without any intervention of the tenant, the forest furnishes inevitably its quantum of available produce, which is immediately realizable.

"Accordingly as forests offer an exception to the general characteristics of productive estates, so they offer an exception in their management, the State retaining it in preference to private individuals."

(From W. Roscher, Ein National und Oekonomisches Hauptprincip der Forstwissenschaft. Leipzig 1854.)

Action of Forests on Retention of Moisture.

"WHEN Napoleon was taken to St. Helena, says M. Blanqui, the English perceived it necessary to take possession of the Isle of Ascension which was nothing but an arid rock, with a scanty covering of a few cryptogamous plants. A company of 100 men was established here. In ten years this little garrison perseveringly formed plantations, and succeeded in creating a productive soil in the island, and caused a spring of water to be formed. The island was also abundantly supplied with vegetables. This is what plantation did on a bare rock in the middle of the ocean."

M. Jules Clavé asks (on this story being told), why go so

far for the proof of a phenomenon which is renewed daily under our eyes, and which every inhabitant of Paris can convince himself of without going beyond the Bois de Boulogne or the forest of Meudon? Let him take a walk after some days' rain, on the road to Chevreuse, bordered on the right hand by the forest of Meudon, on the left by cultivated lands. The quantity of water which has fallen, and the duration of the rainfall, are obviously the same on both sides of the road: nevertheless the ditch on the side of the road adjoining the forest will be still full of water coming from the infiltration through the forest soil; the ditch on the left contiguous to the naked culturable lands will be dry, the water having at once run off. The ditch on the left will, in fact, have in a *few hours* all the water, which it takes the ditch on the right several days to conduct to the valley below. (*Etudes, p.* 54.)

Goats in a Forest.

HERE is a graphic but very true picture of what goats do in a forest: what a perfect description of our Punjab Salt Range, and I have no doubt of other places in India!

The description is of forest of Savoy on the upper mountain ranges.

"You can see here and there a few bushes, the remains of forest that once flourished, but they are now browsed down by cattle, or cut by the villagers as fast as they send forth fresh shoots, until exhausted nature refuses to continue any longer her labor of vegetation; then the bushes disappear altogether, being but a greyish stain on the denuded slope.

"Under such conditions it is not surprising that cattle-feeding should have become, in most places, the chief standby of rural economy. Unfortunately, it is not the herds of white and dun cows that one sees on the sides of the hills of the Jura or Switzerland, whose silver-sounding bells resound far down the valleys; it is almost exclusively sheep and goats that cover the rock, and it is their plaintive bleating that alone breaks the silence of these solitary wastes. The sheep and the goat tear up the herbage instead of biting it clean off. They throw

themselves greedily on all kinds of plants.* They devastate the forest, ruin pasture lands, and cause damage greater and more irremediable than all other cattle put together.

When they are very numerous, they ravage the country just as a flight of locusts would. They cleave the soil with their narrow pointed hoofs, render it thus more easily furrowed by the next rainfall, and thus promote the formation of ravines.

In the four departments of Var, L'Isere, the Hautes and Basses Alpes, these goats are estimated at 1,500,000 in number: but all do not belong actually to the inhabitants of the departments. Some really come from Piedmont and Provence. After having passed the winter on the plains, during summer they are taken to the mountains, where *for a consideration of 50 centimes per head, thy acquire the right of not leaving in their track any trace of vegetation.*

Within proper limits grazing is a precious resource to the mountains; carried to excess, it becomes a veritable scourge."

PUNJABI.

The Dye from the "Toon" flower.

A good yellow dye said to be used for silk dying and to be permanent, is obtained from the flower of the "toon" (*Cedrela toona*).

The panicles of whitish flowers are in blossom in April and early May.

The dye stuff is produced by certain small glandular hypogynous discs at the base of the stamens. It will be observed that some of the flowers are prostemonous, *i. e.*, develope the stamens first, and others are poststemonous, *i. e.*, develope the pistil first: indeed, on examining a small cluster of "toon" flowers one sees a number of flowers with a developed pistil and ovary, in which the stamens are withered and abortive and *develope no colored discs;* the neighbouring flower has stamens and discs and an abortive pistil. The flowers are honey-scented, but it is said insects are not attracted by scent but by color. Can these

* When they do not eat them, they nevertheless bite or rather wrench them off. Any one who has seen a goat in a Deodar or pine forest will have noticed this

discs be intended to attract insects which shake the stamens and thus disperse (or themselves carry away and deposit) the pollen which thus reaches the neighbouring developed pistil? If so, why are the discs at the bottom of the flower, and not conspicuous?

B. H. B. P.

China Blackwood.

SIR,—In your number for October 1875, Mr. Robertson, BOM.C.S., kindly offered to send me seeds of China Blackwood, if he knew my address. Will he kindly send some, 20 seers, if he can spare so much, to address as below.

Yours obediently,

B. H. BADEN-POWELL,

Conservator of Forests, Lahore.

Movements of Pine Leaves.

SIR,—I beg to forward an extract from "The Garden" of February 5th, 1876, regarding an observed curious movement of the leaves of *Abies Nordmanniana*. It would be interesting to know if any of your correspondents have observed any similar movements in our Indian conifers?

I am, Sir,

Yours

C. F. ELLIOTT.

"M. Chatin has lately called attention in the French Academy to some curious periodic movement in the leaves of *Abies Nordmanniana*, which are whitish on the lower, and dark green on the upper, surface. If the tree be observed early in the morning, or about sunset, the "ensemble" of the foliage seems uniformly whitish: whereas, in the course of the day, the green tint seems very general. This is found to result from an alteration in the position of the leaves, so that they present, now their upper, now their under-surface to the observer, and a diurnal position can thus be distinguished from a nocturnal one.

M. Chatin has been studying these movements, and promises some further details regarding them shortly."

On the Killing of Trees.

(*No. III., page* 315.)

As M. H. F. has not thought it worth while to answer the pointless remarks made by F. B. with his talk about lecture rooms and treatises on botany, perhaps an on-looker might do so.

M. H. F. gives a lucid explanation on the point asked, and though his statement with regard to scalariform tissue may want breadth, it must be remembered that the whole subject is by no means as clear as the dogmatic assertions of old writers make it out. We should strongly advise both F. B. and his botanical friend to look for light elsewhere, than in the authorities they quote so wrongheadedly, though even these respectable authors must feel uncomfortable in the mouth of a man who talks about "hyrocarbons" *sic.* Why not hieroglyphics? It reminds one of the story of the S. C. Police Officer who reported that the "renumeration" of certain members of his force was insufficient.

KAD-HANDI.

Reproduction of bamboos by seed.

IN 1872 I reported the supply of bamboos in my charge to be inexhaustible (by fair cutting, *bien entendu*), and such was my firm opinion. We are now only at 1876, and the supply is apparently exhausted. In 1872, what the natives call the "Inda," *i.e.*, the general seeding occurred. I was prepared, by general report, to see the crop on foot die away, and accordingly attempted, with some success, to get rid of it, in exchange for rupees. During the present hot weather, during a lengthened tour through these jungles, I have been horrified to find that, what remained uncut of the old stock was dead on foot, but that any new crop was quite the exception. The natives affirm, that it takes ten years for the seed to give a full-sized bamboo, *i.e.*, that in the natural course of events, if the seed fell in 1872, it would be next to impossible to find the young bamboos in jungle in 1876. To me this is a serious

anxiety, for not only do some 10,000 square miles of country depend on this supply, but it represents an item of five figures in the receipts of a district, whose total forest revenue never rises above five figures. I trust any of your readers, who have had experience on this subject, will give me the benefit of it.

R. C. W.

The Budget Estimate of the Bombay Presidency for 1876-77.

THE nett revenue of the Bombay Presidency has been steadily decreasing since 1873-74, the difference between the actual surplus of that year, and the estimate for 1876-77 being in round number Rs. 1,80,000. The estimated surplus for the year 1876-77 is Rs. 3,79,317, of which Rs. 81,643 are contributed by the Northern Division, Rs. 2,27,093 by the Southern Division, and Rs. 70,581 by Sindh. This falling-off in receipts appears to be chiefly owing to a fall of prices.

The Conservator of the Northern Division thinks that the gross receipts of his charge, which are estimated at Rs. 4,39,678 for 1876-77, "should work up to Rs. 5,00,00," but that "as long as the present system exists of permitting extensive private rights and privileges, of allowing Bheels to fell and remove timber at nominal rates for sale in market towns, to fell and remove for sale head-loads of wood free of charge, it is opposed to the dictates of common sense to expect an efficient protection of the forests, or a proper realization of revenue." In reply, Government say that "Mr. Shuttleworth ought to know that the forests exist for other purposes than to enable his department to show a surplus, and that it is of much greater importance to keep the Bheels quiet, to allow them an honest mode of livelihood suitable to their wild habits, than to take away their means of support and render them outlaws on society." Very well, questions of policy must come first, but then these dreadful Bheels are not the only sinners, and Government should not under-estimate the loss to the forests by an act of philanthropy, nor be surprised if the revenue does not come up to their expectations. Mr. Shuttleworth also points out that tons of firewood, taken ostensibly for private consumption, are shipped to Bombay, and that

the Forest Department, which cannot bring wood to depôt as cheaply as private individuals, is consequently undersold. Government infer from this that the Conservator would like to have a monopoly of the market and point out that such a state of affairs is not at all desirable. But this is certainly not what Mr. Shuttleworth meant. What he evidently wishes to do is, not to stop fair competition, but to check as much as possible the competition with wood, which has been stolen from, and therefore belongs to, the Forest Department. Further on, we find it stated that one of the objects of the Department should be "to guard and preserve from wasteful destruction the timber growing on defined tracts of land," but it is obviously impossible to prevent waste as long as men are allowed to hack about the forests at pleasure, and then dispose of the wood free of charge. If, indeed, the state of things is as bad as the Conservator thinks, it may well be doubted, whether there is any good in keeping up expensive protective establishments.

Rs. 27,005 is the estimate under A. III—3, *Surveys*. The selection of forests is now progressing rapidly, and Government expect the demarcation of the forests of the Northern Division to be finished within three years. One drawback to pushing on the work so quickly is that it cannot be all done by professional foresters, but has to be carried out by Civilians, who know nothing about the work at starting, and who are seldom available for more than one season, so that the experience they gain during that period is lost to the Department.

Rs. 500 in the Southern Division, and Rs. 900 in the Northern Division are entered under IV—1a., *Protection from fire*, including Rs. 500 for clearing 100 miles of firepath, but Government "much doubt the utility of this, and it should be struck out." Comment is unnecessary, but we would invite those, who maintain the utter uselessness of a professional adviser to Government, to note this remarkable statement.

Communicated by "A Forest Officer."

The Forest School of Dreissigacker in 1815.

In his farewell address to the students at the Academy of Tharandt, in 1866, Baron v. Berg gives an account of the subjects studied when he was at the forest school of Dreissigacker. The students must certainly have enjoyed themselves thoroughly during a three years' residence at the school, and assuredly, in those days, none, when leaving the convivial board in the small hours of the morning, could excuse themselves on the plea that they had "to read political economy *before going to bed.*"

According to v. Berg, lectures *were* held on political economy, but how? Forstrath Cramer was the lecturer, a man certainly well-known as the author of several amusing novels, but who had no more idea of the subject on which he had to lecture, than the man in the moon.

For those who were fond of sport, the time must have passed very pleasantly, indeed, as is apparent from the following account of part of the course of training at Dreissigacker in 1815:—

1st year.

1.—Instruction and practice in breaking in pointers and setters.

2.—Netting and snaring.

3.—Gun and rifle-shooting (in summer, target-shooting twice a week), including practice in the field in shooting small game, snaring, and battue-shooting.

4.—Instruction in sporting terms.

2nd year.

1.—Following up wounded game with the deer-hound.

2.—Laying out and management of game-preserves.

3.—Same as number 3 in first year.

3rd year.

1.—Same as number 2 in second year.

2.—Practical instruction in sport.

3.—Same as number 3 in first year.

Jangali Bulbul.

Effects of grazing on Sal Forests.

YOUR contributor W. R. F., remarking on the excellent growth of sâl in blocks in the neighbourhood of, or surrounded by, cultivation, attributes it to the absence of injury from fire, and then proceeds to state that this exemption from fire is due to grazing.

This is surely coming too hastily to a conclusion; for if the question be more closely considered, not only are other reasons apparent both for the comparative immunity from fire which these blocks enjoy, and for the superior timber for which they are remarkable, but it becomes more than doubtful whether the good done by cattle is not counterbalanced by the damage they cause.

On land actually under cultivation there is naturally no growth of grass, and on deserted cultivation and dry forest phantas, the grass is generally short and thin; two very important conditions when we calculate the injury likely to ensue when such grass land is burnt over. The flame would not be high enough to scorch or burn the foliage, nor lasting enough to injure materially the trunks of such trees as might be exposed to it. Again, these blocks of sâl being near cultivation, are naturally resorted to by the neighbouring villagers when wood for domestic purposes is required. The effect of cutting out unreserved woods would be to give more stand-room to the reserved trees, and to benefit the seedlings by allowing more light to penetrate. Given large herds of cattle in the neighbourhood of these blocks, the only good they confer is to graze and trample down the already comparatively harmless grass, whilst they do immense damage by repairing to the shade during the heat of the day when large numbers of seedlings and even saplings are destroyed.

Proceeding to W. R. F.'s suggestion of the presence of cattle along the edge of the forest as an efficient protection against fire, it is to be remarked that it is in direct opposition to the experience of the Indian forester hitherto. This experience teaches us that the first step in fire conservancy is to remove all grazing, as far as possible, from the forest to be preserved.

Cattle, it is stated, have not in any wise injured the seedlings.

Relying on this statement, we have then only to allow free grazing, superabundant grass will disappear, and jungle fires will rapidly become things of the past.

What a future both for Forest officers and owners of cattle! The latter will not only be provided with free subsistence for their herds, but will confer a favor by taking it; whilst the former, relieved from the arduous duties of fire conservancy, in which their effects have hitherto been so unsuccessful, will be able to turn their attention from the defence to the improvement of forests.

Unfortunately, however, cattle are not everywhere so accommodating as in the Eastern Dooars, and till that happy time arrives, when the ordinary cow and buffalo cease to do damage to young growth, and herdsmen are disinterested enough to aid in fire conservancy, it is to be feared that W. R. F.'s efficient protection will not come into general use, and Forest officers will be obliged to continue the adoption of preventive measures dictated both by experience and common sense.

W.

High Forest and Coppice *versus* Coppice with Standards.

WTH reference to Editor's foot-note, page 402, April number, Indian Forester, I should feel very much obliged, if he would develop for the benefit of enquirers his views on the subject.

We in the Punjab have been accustomed to consider in the large plantations under us that Coppice with Standards is advantageous.

G. G. M.

If time permits, we shall try and comply in the October number of the Indian Forester with G. G. M.'s request.—THE EDITOR.

Rats in Nurseries.

TO THE EDITOR, "INDIAN FORESTER.

DEAR SIR,—I am very much troubled with rats in the nurseries, I have made in Changla gulli and Kuja gulli; they are something of the mole kind, burrowing along just under the surface of the soil; they vigorously attack the roots of young *Pinus excelsa.* Can you or any of your correspondents inform me, how I may rid myself of these obnoxious little animals, which cause so much destruction in a nursery, and oblige

Yours sincerely,
E. SPARLING.

Classified List of Officers in the Forest Department

No. of Officers in each Grade	NAMES.	Qualifications in Surveying and the Vernaculars.	SALARIES.		
			Salary of Substantive Appointment.	Officiating or Personal Allowances.	TOTAL.
	INSPECTOR-GENERAL OF FORESTS.		Rs.	Rs.	Rs.
	Mr. D. Brandis, PH. D. ...	.....	1,850	...	1,850
	CONSERVATORS—(7).				
	1st Class—Pay Rs. 1,600				
1	*Lieut.-Col. G. F. Pearson*, M.S.C.	*P. H.*	1,600	...	1,600
	2nd Class—Pay Rs. 1,400.				
2	*Mr. B. H. Baden-Powell*, B.C.S.	*P. H.*	1,400	...	1,400
	3rd Class—Pay Rs. 1,200.				
3	*Major W. J. Seaton*, M. S. C. ...	*P. H.*	1,200	...	1,200
4	Mr. W. Schlich, PH. D. ...	Sindi (colloquial)	1,200	...	1,200
	4th Class—Pay Rs. 1,000.				
5	Captain J. C. Doveton, M. S. C.	H. S.	1,000	...	1,000
6	" E. S. Wood ...	H. S. & Sv.	1,000	...	1,000
7	" G. J. Van Someren, 25th M. N. I.	P. H.	1,000	...	1,000
	Officiating.				
	Lieut.-Col. W. Stenhouse, late 32nd M. N. I.	P. H.	700	300	1,000
	Mr. G. Greig ...	L. S. & Sv.	700	300	1,000
	" B. Ribbentrop ...	L. S. & Sv.	700	300	1,000
	DEPUTY CONSERVATORS—(19).				
	1st Grade—Pay Rs. 900.				
1	*Mr. R. P. Colvin* ...	L. S.	900	...	900
2	Captain F. Bailey, R. E. ...	L. S. & Sv.	900	...	900
3	*Mr. H. Leeds* ...	.....	900	...	900
4	Lieut.-Col. C. Batchelor, B. E. L. C.	P. H.	900	...	900
	Officiating.				
	Mr. I. E. O'Callaghan ...	L. S.	700	200	900
	2nd Grade—Pay Rs. 700.				
5	*Lieut.-Col. W. Stenhouse, late 32nd M. N. I.*	*P. H.*	700	...	700
6	Mr. W. Jacob ...	.....	700	...	700
7	" *I. E. O'Callaghan* ...	*L. S.*	700	...	700

† It appears to us that the original lists contain several mistakes in the column next edition.—THE EDITOR.

under the Government of India, on the 1st April 1876.

AGE.	Date of first Appointment to the Forest Department.	† Period of Service counting for Pension.	Province to which at present attached.	REMARKS.
Years.		Y. M. D.		
52	Jan. 16th 1856	17 1 2	Head-Qrs. of the Govt. of India.	Rising by annual increments of Rs. 50 from Rs. 1,700 to Rs. 2,000.
49	*Sept. 21st* 1860	12 6 10*	*N. W. Provinces..*	*On furlough to Europe for* 2 *years, from* 30*th December* 1872. *Extension on duty for* 8 *months granted by Secretary of State.* **Exclusive of Military Service.*
34	*April 1st* 1869	7 0 0*	*Punjab* ...	*On furlough to Europe for* 2 *years, from* 1*st May* 1874. ** Exclusive of service in other Departments*
39	*Dec. 7th* 1860	12 10 8	*Burma* ...	*On furlough for* 18 *months from* 15*th March* 1874.
36	Dec. 21st 1866	9 3 10	Bengal ...	
37	April 8th 1864	11 11 23*	Central Provinces.	*Exclusive of Military Service.
40	Feb. 1st 1864	12 2 0	Oudh ...	
33	May 9th 1864	11 10 22*	Mysore & Coorg...	*Exclusive of Military Service.
35	Dec. 5th 1862	17 4 8*	Punjab ...	Officiating for Mr. Powell. * Includes Military Service.
37	Dec. 14th 1868	7 3 18	N. W. Provinces...	Officiating for Lieut.-Colonel Pearson.
32	Dec. 21st 1866	9 2 14	Burma ...	Officiating for Major Seaton.
41	*May 1st* 1864	8 9 8	*N. W. Provinces...*	*On furlough for* 15 *months from* 13*th August* 1874.
35	Aug. 24th 1871	4 6 7*	Survey Branch ..	Superintendent, Forest Surveys. *Exclusive of Military Service.
49	*June* 17*th* 1858	17 9 14	*Central Provinces*	*On sick leave for* 15 *months, from* 25*th March* 1876.
45	April 1st 1865	11 0 0*	Punjab ...	*Exclusive of Military Service.
53	May 8th 1864	11 10 23	N. W. Provinces...	Officiating for Mr. Colvin.
35	*Dec. 5th* 1862	17 4 8	*Punjab* ...	*See above.*
43	May 24th 1864	14 10 7*	Central Provinces.	* Inclusive of service in other Departments.
53	*May 8th* 1864	11 10 23	*N. W. Provinces...*	*See above.*

"Period of Service counting for Pension," which, we trust, will be corrected in the

Classified List of Officers in the Forest Department under

No. of Officers in each Grade.	Names.	Qualifications in Surveying and the Vernaculars.	Salaries. Salary of Substantive Appointment.	Officiating or Personal Allowances.	Total.
	DEPUTY CONSERVATORS—*continued.*		Rs.	Rs.	Rs.
	*2nd Grade—Pay Rs.*700—(ctd.)				
8	Mr. B. Browne ...	H. S. & Sv.	700	...	700
9	„ *B. Ribbentrop* ...	*L. S. & Sv.*	700	...	700
10	„ *G. Greig* ...	*L. S. & Sv.*	700	...	700
11	Major H. C. T. Jarrett, V. C., S. C.	P. H.	700	...	700
12	Mr. M. J. Slym ...	.....	700	...	700
13	„ G. W. Strettell ...	Sindi (colloquial)	700	...	700
14	„ C. F. Amery ...	.....	700	...	700
15	„ R. H. E. Thompson ...	... ..	700	...	700
16	„ A. L. Home ...	L. S.	700	...	700
	3rd Grade—Pay Rs. 500.				
17	Captain C. W. Lasack ...	L. S. & Sv.	500	...	500
	Officiating.				
	Mr. A. T. Drysdale ...	H. S. & Sv.	450	250	700
	„ G. Mann ...	L. S.	450	250	700
	„ J. Adamson ...	L. S.	450	50	500
	„ C. J. Ponsonby ...	L. S. Sv. & Sindi	450	50	500
	ASSISTANT CONSERVATORS—(46).				
	1st Grade—Pay Rs. 450.				
1	*Mr. G. Mann* ...	*L. S.*	450	...	450
2	„ *J. Adamson* ...	*L. S.*	450	...	450
3	„ *W. Brereton* ...	*L. S.*	450	...	450
4	„ *A. T. Drysdale* ...	*H. S. & Sv.*	450	...	450
5	„ *C. J Ponsonby* ...	*L. S. Sv. & Sindi*	450	...	450
6	„ E. Sparling ...	.....	450	...	450
7	„ C. Bagshawe ...	L. S.	450	...	450
8	„ J. C. MacDonell ...	L. S. & Sv.	450	...	450
9	„ *J. Macpherson* ...	*P. B. & C.*	450	...	450
10	„ E. Ludlow ...	P. C.	450	...	450
11	„ W. G. Allan ...	L. S. & Sv.	450	...	450
	Officiating.				
	Capt. J. E. Campbell ...	P. H. & Sv.	350	100	450
	Mr. A. Pengelly, M. A. ...	Sindi & Sv.	350	100	450
	„ W. Rigby ...	L. S. & Sv.	350	100	450
	„ R. S. Dodsworth ...	H. S. & Sv.	350	100	450
	„ E. McA. Moir ...	L. S. & Sv.	350	100	450
	„ A. E. Wild ...	L. S. & Sv.	350	100	450
	2nd Grade—Pay Rs. 350.				
12	Mr. N. Daly ...	P. B.	350	...	350
13	„ A. R. Grant ...	L. S.	350	...	350
14	*Captain J. E. Campbell,* S. C.	*P. H. & Sv.*	350	...	350

the Government of India, on the 1st April 1876—(Continued.)

Age.	Date of first Appointment to the Forest Department.	Period of Service counting for Pension.	Province to which at present attached.	Remarks.
Years		Y. M. D.		
47	Dec. 15th 1868	26 5 14*	Punjab ...	*Inclusive of service in other Departments.
32	*Dec. 21st* 1866	9 2 14	*Burma* ...	*See above.*
37	*Dec 14th* 1868	7 3 18	*N W Provinces* .	*See above.*
39	Sept. 28th 1866	9 6 2*	Mysore	*Exclusive of Military Service.
52	Dec. 6th 1860	15 3 25	Burma .	
35	Aug. 13th 1857	11 5 29	Burma .	
42	July 1st 1865	9 0 3	N. W. Provinces..	
37	Jan 1st 1860	15 3 22	Central Provinces	
30	March 1st 1864	8 2 15	Bengal ...	
40	Dec. 25th 1867	8 3 6	Central Provinces	
31	June 27th 1868	9 0 28	Berar ..	*Vice* Lieut.-Col Stenhouse. Rs 50 acting allowance; Rs. 200 special allowance.
40	Dec. 1st 1864	12 4 3	Assam	*Vice* Mr. Greig. Rs 50 acting allowance; Rs. 200 special allowance.
45	April 1st 1861	13 5 15	Burma ...	*Vice* Captain Douglas.
28	May 28th 1868	6 5 20	Oudh ..	*Vice* Mr. Ribbentrop.
40	*Dec. 1st* 1864	12 4 3	*Assam* ...	*See above.*
45	*April 1st* 1861	13 5 15	*Burma*	*See above.*
31	*Aug. 21st* 1866	8 7 28	*N. W. Provinces*	*On sick leave for 18 months, from 19th April* 1875.
31	*June 27th* 1868	9 0 28	*Berar* ...	*See above.*
28	*May 28th* 1868	6 5 20	*Oudh* ...	*See above.*
53	June 10th 1865	29 11 1*	Punjab ..	*Inclusive of service in other departments.
29	Oct. 26th 1869	6 5 6	N. W. Provinces...	
27	Aug. 1st 1867	5 0 16	Bengal ...	
28	*Nov. 15th* 1868	6 8 16	*Mysore* ...	*On Furlough for 18 months, from 5th February* 1875.
31	Jan. 14th 1867	7 8 2	Ditto ...	
41	July 2nd 1871	4 8 29	Punjab ...	
32	April 14th 1871	4 11 17	N. W. Provinces	Offg from 13th Aug 1874.
33	Dec. 16th 1869	6 3 16	Ditto ...	Ditto 1st April 1875.
32	July 8th 1865	7 11 23	Punjab ...	Ditto ditto.
27	May 3rd 1868	5 5 23	Oudh ...	Ditto ditto.
27	Jan. 4th 1870	5 10 24	Ajmere ...	Ditto ditto.
29	Oct. 1st 1869	6 3 6	Burma ...	Ditto ditto.
36	June 1st 1866	9 10 0	Mysore ...	
33	June 10th 1867	8 1 2	N. W. Provinces...	
32	*April 14th* 1871	4 11 17	*Ditto* ...	*See above.*

Classified List of Officers in the Forest Department under

No. of Officers in each Grade	NAMES	Qualifications in Surveying and the Vernaculars.	Salaries.		
			Salary of Substantive Appointment.	Officiating or Personal Allowances	Total.
	ASSISTANT CONSERVATORS—(46)—*Contd.*		Rs.	Rs.	Rs.
	2nd Grade—Pay Rs 450				
15	*Mr A Pengelly, M A*	*Sindi & Sv.*	350	...	350
16	„ *W. Rigby*	*L S & Sv*	350	...	350
17	„ *R S Dodsworth*	*H S & Sv*	350	...	350
18	„ H H Davis	L S	350	...	350
19	„ *E McA Moir*	*L S Sv.*	350	..	350
20	„ C E Nepean	P B & G Sv.	350		350
21	„ *A E Wild*	*L S & Sv.*	350	...	350
22	„ C. F Elliot	L. S & Sv.	350	..	350
23	„ R H M Ellis	L S & Sv	350	...	500
24	„ G G Minniken	L S. & Sv.	350	.	350
25	„ W S Hillier	L S & Sv	350		350
26	„ W H Reynolds	L S & Sv.	350	150*	500
27	„ J M Braidwood	L S	350		350
28	„ M H Ferrars, B A.	B L S & Sv.	350		350
29	„ J S Gamble, B A	L S & Sv.	350	.	350
30	„ R H C. Whittal	L S & Sv.	350		350
31	„ W P Thomas	L S & Sv.	350		350
32	„ W Shakespear	L S & Sv.	350		350
33	„ E Forrest	L S	350		350
34	„ J T Jellicoe	P C & Sv.	350		350
35	„ G H Foster	P P test in II	350	.	350
36	„ L A W Rind	L S & Sv.	350		350
37	„ F O Lamarchand	L S & Sv.	350	..	350
38	„ J McKee	L S & Sv	350	...	350
39	„ E P Dansey .	B L S & Sv	350	.	350
40	„ F B Dickinson	P C & Sv.	350		350
41	„ D E Hutchins .	P C & Sv.	350		350
42	„ H C Hill	L S & Sv.	350	100*	450
43	„ E P Popert .	B L S & Sv.	350	...	350
44	„ W R Fisher, B A	L. S & Sv.	350	..	350
	3rd Grade—Pay Rs 250.				
45	„ F C Hicks	L S.	250	..	250
46	„ W Johnston, L C. E. .	L S & Sv.	250	...	250
1	„ E E Fernandez ..	L S & Sv.	250		250
2	„ A Smythies B. A. .	L S & Sv.	250	.	250
3	„ S. E Wilmot ...	L S & Sv.	250		250
4	„ G F Prevost .	L. S & Sv	250		250
5	„ F D'A Vincent .	L S & Sv.	250	..	250
6	„ E Fuchs	Sv	250		250
7	„ E D M Hooper ...	L. S. & Sv.	250	...	250
8	„ H Moore ...	L. S & Sv	250	...	250
9	„ R N Anstruther	Sv	250	..	250
10	„ J W. Oliver .	Sv.	250	..	250
11	„ W. E D'Arcy	Sv.	250	...	250
12	„ A. J Mein	Sv.	250	.	250
13	„ E G Chester ..	Sv	250	..	250
14	„ P G Carter ..	Sv.	250	...	250
15	„ F B Manson	Sv	230	...	250
16	„ J. Nisbett	Sv.	250	...	250
17	„ F. H. Bonham Carter ...	Sv.	250	...	250
	OFFICIATING ASSISTANT CONSERVATOR				
	Mr H R. Ring .	S L.	200	50	250

BENGAL SECRETARIAT LIBRARY

the Government of India, on the 1st April 1876—(Continued).

Age.	Date of first Appointment to the Forest Department.	Period of Services counting for Pension.	Province to which at present attached.	REMARKS.
Years.		Y. M. D.		
33	*Dec. 16th* 1869	6 3 16	*N. W. Provinces*	*See above.*
32	*July 8th* 1865	7 11 23	*Punjab* ...	*See above.*
27	*May 3rd* 1868	5 5 23	*Oudh* ...	*See above.*
30	Oct. 1st 1868	7 6 0	Bengal ...	
27	*Jan. 4th* 1870	5 10 24	*Ajmere* ..	*See above.*
44	Nov. 12th 1865	10 4 9	Burma ...	
29	*Oct. 1st* 1869	6 3 6	Ditto. ...	See above.
29	Jan. 17th 1868	6 2 9	Punjab ...	
34	May 1st 1868	6 6 0	Ditto ...	
29	Feb. 26th 1869	7 1 5	Ditto ...	
32	July 17th 1869	4 10 6	Ditto ...	
33	Jan. 1st 1871	5 3 0	Survey Branch ...	* Special allowance.
35	Nov. 9th 1870	5 4 22	N. W. Provinces...	
29	Dec. 5. 1871	4 3 17	Burma ...	
28	Jan. 2nd 1872	4 3 0	Bengal ...	
27	Nov. 25th 1871	4 4 6	Burma ...	
26	Feb. 14th 1869	4 0 6	Central Provinces..	
26	Mar. 27th 1869	4 11 21	Assam ...	
26	Jan. 25th 1869	4 5 2	Punjab ...	
27	Nov. 22nd 1871	4 4 9	Mysore ...	
26	Dec. 17th 1868	4 5 28	Central Provinces..	
27	April 23rd 1870	5 5 12	N. W. Provinces...	
26	Oct. 1st 1869	4 8 0	Punjab ...	
27	Oct. 2nd 1869	5 3 21	Central Provinces.	
26	Dec. 20th 1872	3 3 11	N. W. Provinces...	
24	Dec. 22nd 1872	3 3 10	Mysore ...	
25	Dec. 22nd 1872	3 3 10	Mysore ...	
24	Dec. 23rd 1872	2 1 6	Survey Branch ...	* Special allowance.
23	Dec. 28th 1872	1 11 6	Burma ...	
30	Dec. 16th 1872	3 3 16	Assam ...	
34	Sept 1st 1866	9 7 0	Mysore ...	
29	Dec. 13th 1872	2 3 18	Bengal ...	
26	Dec. 5th 1873	2 3 27	Central Provinces.	Supernumerary.
28	Dec. 10th 1873	2 3 22	Central Provinces.	Ditto.
23	Dec. 10th 1873	2 3 21	Oudh ...	Ditto.
25	Dec. 25th 1873	2 2 25	Berar ...	Ditto.
24	Sep. 27th 1873	2 1 16	Punjab ...	Ditto.
24	Jan. 9th 1874	2 2 23	Bengal ...	Ditto.
22	Dec. 8th 1874	0 7 21	Central Provinces	Ditto.
22	Dec. 8th 1874	0 9 4	Ditto ...	Ditto.
24	Dec. 19th 1874	1 3 12	Burma ...	Ditto.
25	Dec. 19th 1874	1 3 12	Ditto ...	Ditto.
25	Jan. 4th 1876	0 2 28	Assam ...	Ditto.
25	Jan. 8th 1876	0 2 24	Ditto ...	Ditto.
	Jan. 12th 1876	0 2 20	Bengal ...	Ditto.
	Jan. 19th 1876	0 2 13	Burma ...	Ditto.
25	Jan. 26th 1876	0 2 6	Bengal ...	Ditto.
	Jan. 26th 1876	0 2 6	Burma ...	Ditto.
22	Mar. 11th 1876	0 0 21	Bengal ...	Ditto.
28	July 1st 1870	5 9 0	Coorg ...	Officiating from the 14th August 1871.

WEST BENGAL SECRETARIAT LIBRARY

Classified List of Officers in the Forest Department under

No. of Officers in each Grade.	NAMES.	Qualifications in Surveying. and the Vernaculars.	SALARIES.		
			Salary of Substantive Appointment.	Officiating or Personal Allowances.	TOTAL.
	SUB-ASSISTANT CONSERVATORS—(16). *Pay Rs.* 200.				
1	Mr. J. Ballantyne ...	L. S.	200	100	300
2	„ H. B. Condon ...	L. S. & Sv.	200	...	200
3	„ G. A. Richardson ...	L. S.	200	...	200
4	„ J. S. Mackay. ...	L. S. & Sv.	200	...	200
5	„ *H. R. Ring* ...	*L. S.*	200	...	200
6	„ W. King ...	L. S. & Sv.	150	50	200
7	„ *G. Stratford* ...	*P. B. & Sv.*	200	...	200
8	„ O. Greig ...	L. S. & Sv.	200	...	200
9	„ E. A. Down ...	L. S. & Sv.	200	...	200
10	„ E. Dobbs ...	P. C. L. S. & Sv.	200	...	200
11	„ C. W. Palmer ...	L. S.	200	...	200
12	Anwar Khan ...	H.	150	...	150
13	Mr. C. E. Fendall ...	L. S. & Sv.	200	...	200
14	„ A. Stewart ...	L. S. & Sv.	200	...	200
15	„ T. G B. Atkinson ...	L. S. & Sv.	200	...	200
16	„ Shaik Mohi-ú-din ...	P. H.	200	...	200

the Government of India, on the 1st April 1876—(Continued).

AGE.	Date of first Appointment to the Forest Department.	Period of Services counting for Pension.	Province to which at present attached.	REMARKS.
35	Oct. 19th 1868	7 6 12	Berar ...	Under covenant as a Forester.
29	Jan. 19th 1869	7 2 4	Assam ...	
27	Dec. 6th 1869	5 5 19	Bengal ...	
32	Jan. 15th 1870	6 0 25	Punjab ...	
28	*July 1st* 1870	5 9 0	*Coorg* ...	*See above.*
28	July 26th 1870	5 8 5	Mysore ...	
35	*Sep. 6th* 1870	4 6 29	*Burma* ...	*On furlough for* 18 *months from* 20*th April* 1875.
26	April 1st 1871	5 0 0	N. W. Provinces...	Attached to Survey Branch for 12 months, from 1st September 1875.
31	May 29th 1871	4 10 8	Ditto ...	
28	July 12th 1871	4 8 20	Central Provinces.	
26	June 9th 1871	4 9 22	N. W. Provinces...	
40	Feb. 1st 1861	15 2 0	Ajmere ...	At first appointed as a Native Doctor.
25	Mar. 6th 1871	3 11 12	Punjab ...	
23	Mar. 6th 1871	1 8 23	Ditto ...	
40	April 26th 1871	4 11 5	Ditto ...	
41	Feb. 15th 1863	13 1 16	N. W. Provinces...	First appointed as a Darogah.

Disposition List of Forest Officers under the Government of India, on the 1st April 1876.

GOVERNMENT OF INDIA... Mr. D. Brandis, Ph.D., Inspector-General of Forests.

I.—BENGAL.

DIRECTION ... ... Mr. W. Schlich, Ph. D., Conservator, in charge.
Mr. W. Johnston, L. C. E., Assistant Conservator, Office.

1. *Darjeeling Division* ... Mr. J. S. Gamble, B. A., Assistant Conservator, in charge.
Mr. F. B. Manson, Assistant Conservator, Bamunpokri Range.
Mr. F. H. Bonham Carter, Assistant Conservator, Dumsong Range.
2. *Jalpaiguri Division* ... Mr. J. C. McDonell, Assistant Conservator, in charge.
Mr. E. Fuchs, Assistant Conservator, Buxa Range.
3. *Palamow Division* ... Mr. G. A. Richardson, Sub-Assistant Conservator, in charge.
4. *Sunderbuns Division* ... Mr. A. L. Home, Deputy Conservator, in charge.
5. *Chittagong Division* ... Mr. H. H. Davis, Assistant Conservator, in charge.
Mr. E. G. Chester, Assistant Conservator, Cox Bazaar Sub-Division.
6. *Singhbhoom Division* ... Vacant.

II.—N. W. PROVINCES.

DIRECTION ... ... Mr. G. Greig, Officiating Conservator, in charge.
Mr. J. M. Braidwood, Assistant Conservator, Office, also Naini Tal Sub-Division.

1. *Kumaun Division* ... Captain J. E. Campbell, Assistant Conservator, in charge.
*Mr. J. M. Braidwood, Assistant Conservator, Naini Tal Sub-Division, also Office of Direction.
*Mr. A. Pengelly, M. A., Assistant Conservator, Ranikhet Sub-Division.
2. *Garhwal Division* ... Mr. C. F. Amery, Deputy Conservator, in charge.
Mr. E. P. Dansey, Assistant Conservator, attached.
3. *Dehra Dún Division* ... Mr. J. E. O'Callaghan, Deputy Conservator, in charge, Shaik Mohi-ú-din, Sub-Assistant Conservator, Eastern Dún.
Mr. E. A. Down, Sub-Assistant Conservator, Eastern and Western Saharanpur.
4. *Jaunsar Division* ... Mr. C. Bagshawe, Assistant Conservator, in charge.
Mr. C. W. Palmer, Sub-Assistant Conservator, Deoban Range.
Mr. L. A. W. Rind, Assistant Conservator, Deota Range.

---

* It cannot be seen from the lists, whether these two Officers are under the direct orders of the Conservator of Forests, or under those of the Officer in charge of Kamaun Division.—THE EDITOR.

II.—N. W. PROVINCES—(*continued.*)

5. *Bhagirathi Division* ... Mr. J. E. O'Callaghan, Deputy Conservator, in charge in addition to Dehra Dún Division.

6. *Gorakhpur Division* ... Mr. A. R. Grant, Assistant Conservator, in charge.

III.—PUNJAB.

DIRECTION ... ... Lieutenant-Colonel W. Stenhouse, M. N. I., Officiating Conservator, in charge.
Mr. W. Righy, Assistant Conservator, Office.

1. *Sutlej Division*... ... Lieutenant-Colonel C. Batchelor, Deputy Conservator, in charge.
Mr. F. d'A. Vincent, Assistant Conservator, attached.
Mr. C. E. Fendall, Sub-Assistant Conservator, Lower Ravi Sub-Division.

2. *Beas Division* ... ... Became Vacant on the 18th March 1876, by the death of Captain Douglas, Deputy Conservator of Forest.

3. *Ravi Division* ... ... Mr. W. G. Allen, Assistant Conservator, in charge.

4. *Chenab Division* ... Mr. E. Forrest, Assistant Conservator, in charge.
Mr. T. G. B. Atkinson, Sub-Assistant Conservator, Lower Chenab Sub-Division.

5. *Jhelam Division* ... Mr. E. Sparling, Assistant Conservator, in charge.
Mr. F. O. Lemarchand, Assistant Conservator, Lower Jhelam Division.

6. *Rawalpindi Division* ... Mr. C. F. Elliott, Assistant Conservator, in charge.

7. *Fuel Reserve, Central Division* ... ... Mr. B. Browne, Deputy Conservator, in charge.
Mr. R. H. Ellis, Assistant Conservator, Multan Sub-Division.

8. *Fuel Reserve, Northern Division* ... ... Mr. W. S. Hillier, Assistant Conservator, in charge.

9. *Plantation Division* ... Mr. G. G. Minniken, Assistant Conservator, in charge.
Mr. A. Stewart, Sub-Assistant Conservator, Changa Manga Circle.

IV.—OUDH.

DIRECTION ... ... Captain E. S. Wood, Conservator, in charge.

1. *Kheri Division*... ... Mr. R. S. Dodsworth, Assistant Conservator, in charge.
Mr. S. E. Wilmot, Assistant Conservator, attached.

2. *Bahraich Division* ... } Mr. C. J. Ponsonby, Officiating Deputy Conservator in charge.
3. *Gonda Division* ... }

V.—CENTRAL PROVINCES.*

DIRECTION ... ... Captain J. C. Doveton, Conservator, in charge.
Mr. J. McKee, Assistant Conservator, Office.

1. *Northern Division* ... Captain C. W. Losack, Deputy Conservator, in charge.
Mr. H. Moore, Assistant Conservator, Mandla Sub-Division.

---

* The name of Mr. A. Smythies, Assistant Conservator of Forests, Central Provinces, does not appear in the Original Disposition List.—THE EDITOR.

V.—CENTRAL PROVINCES—(*continued.*)

2. *Western Division* ... Captain J. C. Doveton, Conservator, in charge, in addition to Directions.
Mr. E, D. M. Hooper, Assistant Conservator, Kalibheet and Kamapur Sub-Divisions.
Mr. E. E. Fernandez, Assistant Conservator, Punnassa Sub-Division.

3. *Southern Division* ... Mr. R. Thompson, Deputy Conservator, in charge.
Mr. W. P. Thomas, Assistant Conservator, Ahiri Forest.
Mr. E. Dobbs, Sub-Assistant Conservator, Moharli Sub-Division.

4. *Central Division* ... Mr. W. Jacob, Deputy Conservator, in charge.

5. *Eastern Division* ... Captain J. C. Doveton, Conservator, in charge, in addition to Direction and Western Division.

6. *Saugor Division* ... Mr. G. H. Foster, Assistant Conservator, in charge.

VI.—BRITISH BURMAH.

DIRECTION ... ... Mr. B. Ribbentrop, Officiating Conservator, in charge.

1. *Rangoon Division* ... Mr. G. W. Strettell, Deputy Conservator, in charge.
Mr. P. J. Carter, Assistant Conservator, Western Sub-Division.
Mr. R. N. Anstruther, Assistant Conservator, Eastern Sub-Division.

2. *Tharrawaddie Division* Mr. A. E. Wild, Assistant Conservator, in charge.
Mr. E. P. Popert, Assistant Conservator, North Tharrawaddie Sub-Division.
Mr. J. W. Oliver, Assistant Conservator, South-Tharrawaddie Sub-Division.
Mr. J. Nisbet, Assistant Conservator, Demarcation State Reserve.

3. *Prome Division* ... Vacant by the death of Mr. Watters.

4. *Western Division* ... Vacant by the death of Mr. Watters.

5. *Sittang Division* ... Mr. J. Adamson, Officiating Deputy Conservator, in charge.
Mr. C. F. Nepean, Assistant Conservator, Shwegyeen Sub-Division.

6. *Salween Division* ... Mr. M. J. Slym, Deputy Conservator, in charge.
Mr. M. H. Ferrars, Assistant Conservator, attached.

7. *Kadoe Revenue Station* Mr. M. J. Slym, Deputy Conservator, in charge, in addition to Salween Division.

8. *Tavoy Division* ... Mr. R. H. C. Whittall, Assistant Conservator, in charge.

VII.—MYSORE AND COORG.

DIRECTION ... ... Captain G. J. VanSomeren, Conservator, in charge.
Mr. F. C. Hicks, Assistant Conservator, Office.

1. *Nagar Division* ... Major H. C. T. Jarrett, V. C., Deputy Conservator, in charge.

2. *Mysore Division* ... Mr. J. T. Jellicoe, Assistant Conservator, in charge.

3. *Hassan Division* ... Mr. D. E. Hutchins, Assistant Conservator, in charge.

VII.—MYSORE AND COORG—(*continued.*)

Nundydroog Division... Mr. E. Ludlow, Assistant Conservator, in charge.
Mr. N. Daly, Assistant Conservator, attached.

5. *Coorg Division* ... Mr. H. R. Ring, Officiating Assistant Conservator, in charge.
Mr. F. B. Dickinson, Assistant Conservator, on special duty, surveying the Ghat forests.

VIII.—HYDERABAD ASSIGNED DISTRICTS—BERAR.

DIRECTION ... ... Mr. A. T. Drysdale, Officiating Deputy Conservator, in charge.

1. *Northern Division* ... Mr. A. T. Drysdale, Officiating Deputy Conservator, in charge, in addition to Direction.
Mr. J. Ballantyne, Sub-Assistant Conservator, Mailghat Sub-Division.

2. *Southern Division* ... Mr. G. F. Prevost, Assistant Conservator, in charge.

IX.—ASSAM.

DIRECTION ... ... Mr. G. Mann, Officiating Deputy Conservator, in charge.

1. *Goalpara Division* ... Mr. W. R. Fisher, B. A., Assistant Conservator, in charge.

2. *Gauhati Division* ... Mr. A. J. Moin, Assistant Conservator, in charge.

3. *Tezpur Division* ... Mr. W. E. D'Arcy, Assistant Conservator, in charge.

4. *Golaghat Division* ... Mr. H. B. Condon, Assistant Conservator, in charge.

5. *Cachar Division* ... Mr. W. Shakespear, Assistant Conservator, in charge.

X.—AJMERE AND MHAIRWARRA.

Mr. E. McA. Moir, Assistant Conservator, in charge.
Mahomed Anwar Khan, Sub-Assistant Conservator, attached.

Fig. 1.

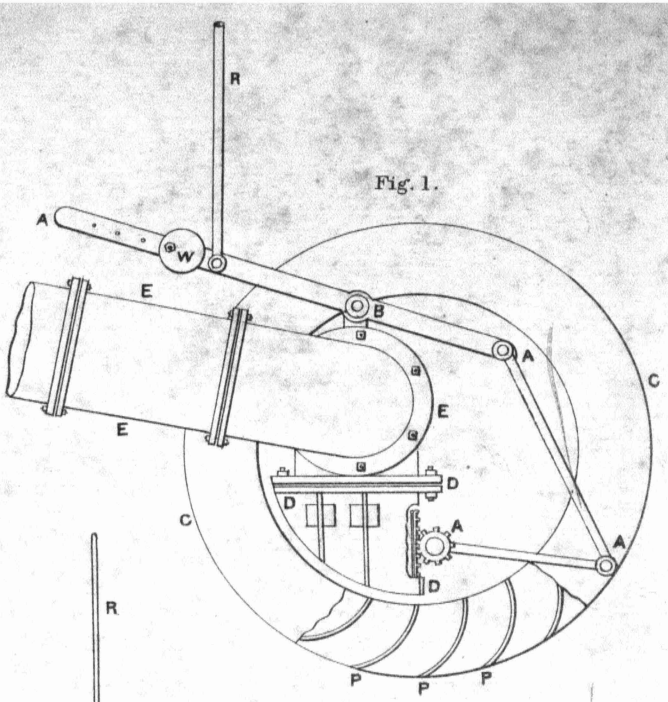

SCALE, 3/100

Fig. 2.

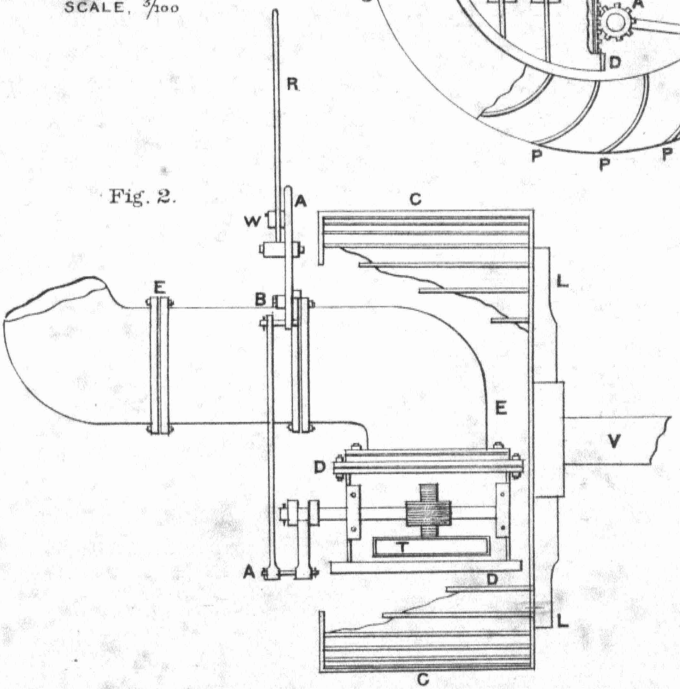

SECTION THROUGH CENTRE SHOWING WATER BOX IN POSITION

ELEVATION OF WHEEL PARALLEL TO AXLE

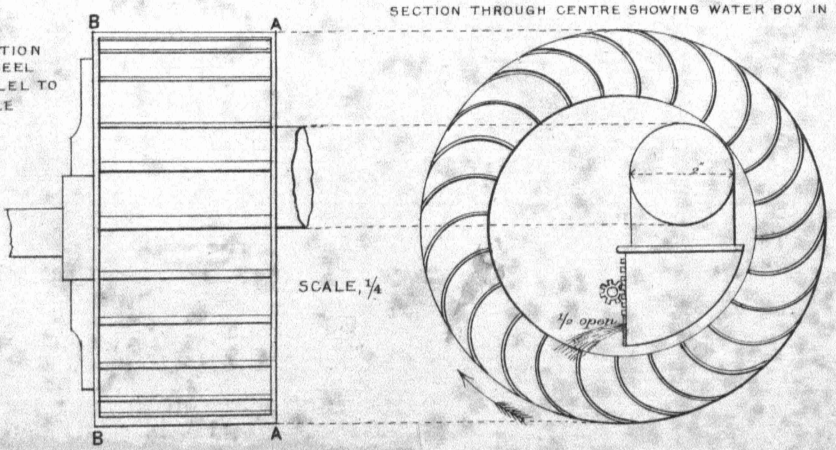

SCALE, 1/4

INDIAN FORESTER.

Vol. II.] OCTOBER, 1876. [No 2.

Canson's hydraulic motor and its application to Forest Sawmills.*

By A. Smythies.

Forest sawmills in a hilly or mountainous country are placed under somewhat peculiar conditions; they are almost always situated far from regular workshops where their machinery could be repaired; they are generally located in valleys in the middle of, or in close proximity to, the forest, where the streams, without possessing a large body of water, have nevertheless a sufficiently rapid fall to give the requisite power within a short distance, that is to say, the fall enables us to dispense with the cost of constructing a long canal. Thus to utilise the power supplied by nature in mountain streams, we must have a prime mover that is at once simple and solid, easy to repair and keep in good order, capable of working under a small volume of water with a considerable fall, and endued with a high velocity of its own.

Hydraulic movers that have hitherto been employed do not satisfy these conditions in a complete manner; undershot wheels lose a large quantity of the work that the water is capable of performing; breast and overshot wheels labour under the same disadvantage when moving at a high speed; if a lower velocity is given to them, they require extra machinery to multiply the speed, and this increases the cost, makes the sawmill more complicated, and is an additional cause of loss of power.

Turbines which have been introduced more recently are free from these disadvantages, for they move at a high velocity, and

* For the greater portion of these notes, I am indebted to a small pamphlet on the subject by M. Roussol, Professor at the Forest School of Nancy.

A. S.

the proportion of effective to gross work is very great; but in spite of numerous attempts to introduce them into the class of sawmill, we are here considering, they have not proved a complete success. In point of fact, a turbine constitutes rather a delicate kind of machine, the workmen allow bits of wood and stones to enter the interior, and frequent repairs become necessary; we have seen that to obtain these repairs is a matter of some difficulty, and turbines, though well enough adapted to town industries, are not so well suited to forest sawmills as the wheel which forms the subject of this notice.

It was invented by a paper manufacturer in France named M. Etienne de Canson-Montgolfier, I believe about 30 years ago, for in 1849 he brought it to the notice of the Academy of Sciences in Paris, and it is generally called after him, the Canson wheel. His invention soon attracted the attention of engineers, and at the present day there are over 200 wheels on this model working away in the Vosges mountains, a tract of country from its innumerable and rapid streams eminently adapted to this particular motor. I propose to limit my remarks to a short description of the wheel, with some account of its construction, its power of working, and its cost. The mathematical theory, on which the construction of this wheel is based, is ingenious, but it would take up too much space to go into it fully, and moreover it is not probable that it would prove generally interesting.

The annexed drawings will give a better idea of the construction of the wheel than any amount of written description, but at the same time there are a few points that merit special notice, and by calling attention to these, the drawings will be rendered more intelligible.

The wheel is made entirely of iron, and consists essentially of two plane circular flanges, of the same size, and centered on the same axis; it would be more correct to say, of the same diameter, for it will be observed that one of them is full, while the other has its central portion cut out, in order to admit of the passage of the supply-pipe into the interior. These flanges are joined by a series of curved iron blades or paddles, each of which forms part of a cylindrical surface,

whose generating line is parallel to the central horizontal axis of the whole machine. A section perpendicular to this axis shows the blade as part of a circle, which meets the interior circumference of the hallowed-out flange at an angle very nearly equal to 90°, and the exterior circumference at an angle comprised between 20° and 30°. The mathematical theory, on which the construction of the wheel is based, shows exactly what these angles should be in order that the maximum amount of effective work may be obtained, but in this, as in many other cases, it is not possible to follow the indications of theory. For instance, according to the theory, the latter angle—the one comprised between the blade and the exterior circumference—should be zero, but the consideration that plenty of room must be allowed for the escape of the water *through* the wheel results practically in the angle being of the magnitude already mentioned, 20° to 30°.

There is nothing else between the flanges, so the space comprised between two consecutive blades and the flange on either side is a short curved canal, which gradually becomes wider as it recedes from the interior outwardly.

Water is admitted on to the lower portion of the inside of the wheel, and a mere glance at the position of the water-escape box and the conduit-pipe will show at once that it is impossible to strengthen the flanges by any arms or bands in the inside; hence the arms are placed on the outside of the solid flange—the one opposite to the conduit-pipe—and to them the shaft is attached. Thus the whole weight of the wheel acts at one end of the shaft, and though this is counterbalanced to some extent by a fly wheel at the other end, it has been remarked that the shaft ceases to work perfectly true after the lapse of some time. This has also been attributed to the fact that the timber-frame always stopping at the lower part of its vertical course, the water on the opening of the small door in the water-box always strikes against the same portion of the wheel (for to one up and down movement of the timber-frame corresponds one rotation of the wheel as will be seen further on). If this were the principal cause, it could be easily got rid of by adapting a break so as to arrest the motion of the timber-frame

at any point in its course; but this is only a slight disadvantage after all, and has not hindered the successful competition of this wheel with others of a similar kind, against which this fault could not be urged.

The water-box is placed as close as possible to the interior edges of the blades, and a small door, which can be raised and lowered by means of levers from the inside of the sawmill where the men are at work, permits the water to shoot out on to the blades with a high velocity. The thickness of this sheet of water at its exit is equal to the height to which the door is raised, and this is seldom more than two inches. Its breadth is a little bit less than the interior distance between the two flanges, for the water, owing to the great pressure, spreads out laterally, and the width of the door has to be so arranged that the water may just cover the entire width of the blades; otherwise some of the water would escape without doing work, and there would be a loss of power.

The conduit-pipe should be of such a diameter as to convey the whole supply of water without stoppage and no more, *i.e.*, the discharge capacity of the pipe should be exactly equal to the available supply of water; it should have the steepest slope, and as few angles or corners as possible; where elbows are necessary, curves of large radius should connect the straight portions of the pipe, so that all the fluid veins may be considered parallel to each other at any section normal to the pipe. The pipe may be made of sheet or cast iron, or even of pieces of wood bound solidly together.

I have said that the water shoots out on to the blades with a considerable velocity; this velocity differs but little from the theoretical velocity due to the head of water employed, friction in the conduit-pipe being the chief cause of difference. Various heads have been utilised, but 15 feet should be looked upon as a minimum. One sawmill in France works with a head of 72 feet—a thin stream of water—which would give a velocity at its exit from the small trap-door termed the initial velocity of about 68 feet per second. An ordinary head would be 25 feet, and this would give a theoretical initial velocity of 40 feet per second.

The principal advantage of the Canson wheel consists in its own inherent velocity, which varies from 140 to 170 revolutions per minute, thus enabling us to dispense with all machinery for multiplying the speed; hence the connecting rod of the timber-frame is attached directly to the shaft-crank. Here we obviously have a very simple machine consisting of the water-wheel itself, and shaft carrying a fly-wheel and crank in one, and a small eccentric to work the timber-carriage, and it is a machine that very seldom gets out of order, or requires repair.

As the water is delivered through a pipe, any fall however great can be utilised; hitherto turbines alone could have worked with a head of 72 feet; but M. Canson's wheel has this advantage over turbines, that there is no pivot working under water—an arrangement that periodically and frequently gets out of order, and demands the aid of a skilled mechanic to put it to rights; this from the nature of the case is difficult to obtain, and would any how result in loss of time.

There are certain rules for constructing the wheel, which are deduced from the mathematical formulæ; these need not be given here, but it may be remarked that, when it is intended to erect a sawmill of this description, the very first thing to do is to find out the available head, and then to calculate the initial velocity of the water, *i.e.*, the velocity at its exit from the little trap-door in the water-box. The whole construction of the wheel and mill is based upon this initial velocity, so there is no fear of first building the sawmill and then finding out, when too late, that there is not enough water to make the wheel go round. A wheel of this description that has a diameter of 4 feet is considered a very large wheel; many are 3 feet in diameter, some are even less. The drawings, however, will show the real sizes of the various parts, as they were drawn to scale from a sawmill actually at work in the Vosges.

Having said thus much on the wheel and its construction, I now come to its effective power, and the work it is capable of doing.

From experiments carried out by M. de Canson, it was satisfactorily determined that, with a head of 18 to 20 feet,

the effective work was 60 to 65 per cent. of the gross work due to the fall of water. The same co-efficient 0·65 was also found with a head of about 40 feet. With a head of less than 12 or 15 feet, the effective work would diminish rapidly. This proportion of effective to gross work may appear small, but it must not be forgotten that the high speed of the Canson wheel enables us to dispense with all multiplying power, and hence one great cause of loss of work is done away with; and moreover we can utilise much higher falls than is possible with other kinds of hydraulic motors. It may be observed here that the maximum amount of work is obtained in practice by taking the angular velocity of the interior circumference of the hollowed out flange as equal to half the initial velocity of the water.

In France, these sawmills are generally used for converting logs into planking, and almost invariably only one saw is attached to the timber-frame. This one saw tears through the wood at the rate of 30 linear inches per minute, the number of strokes being the same as the number of revolutions of the wheel, in this case about 165 per minute. The actual outturn is 1,600 running feet, or 1,260 superficial feet per day of 20 hours, and this with only one saw in the timber-frame; it must not be forgotten, however, that we are here alluding to the comparatively soft wood of the silver fir (*Abies pectinata*), a very different material to our Indian sál and teak. I regret that I cannot give the real working power of the sawmill from which the drawings were taken, but it was probably not more than 7 H. P., a force that is amply sufficient to cut up heart of oak with one saw at a time; it is improbable that these mills ever exceed 10 H. P., and whether that force is sufficient to deal with sál and teak, I must leave to more experienced hands to determine.

The simplicity of these machines is well illustrated by the establishment necessary to keep them going. In France, the whole establishment employed on the sawmill itself consists of two men and two boys; they work in relays, a man and a boy at a time; the working day is 20 hours, and they can easily reckon upon 300 days work in the year.

A few remarks on the cost of the wheel and of the whole sawmill will not be out of place. The wheel itself in French workshops would cost about 1,500 francs, or say Rs. 700. The mechanism complete would amount to between 5,000 and 6,000 francs, say Rs. 2,000 to Rs. 2,500; and the whole sawmill, building and all, would cost 10,000 francs, or Rs. 4,000. Any good workshop would be able to construct a wheel of this description; for instance, Messrs. Nicol and Co. of Bombay could doubtless turn one out, if they were provided with the requisite drawings and specification; the cost would vary with the current price of iron in the market. The best manufacturers in France are Messrs. Wiedmann Brothers of Rothau (Alsace); others are Messrs. Beyer Brothers of Saint Dié (Vosges), and Messrs. Royer of Epinal, and Goulut of Bru, also in the Vosges.

The foregoing remarks, incomplete though they be, may perhaps serve to draw the attention of Forest officers to a class of sawmill that is simple, effective, and comparatively cheap, requires few repairs, and takes up but little space—which is an advantage sometimes in mountain valleys. The supply of water in India is governed by far different laws to those which hold good in the Vosges; but I am convinced that in many localities out here—and not only in the Himalaya—the requisite conditions for the successful working of a Canson wheel are available, *viz.*, an unfailing supply of a small quantity of water with a considerable head. Whether in such localities there are any State forests, and whether these forests contain any marketable timber, are no doubt considerations that have a prior claim on our attention, but into these it is not my province to inquire.

In conclusion I may state that a small working model of the wheel and shaft has been constructed, and arrangements can be made for sending it by rail to any Forest officer desirous of seeing it, on application to the Conservator of Forests, Central Provinces.

Explanation of the Plate.

FIGURE 1 shows the projection of the wheel on a vertical plane at right angles to the central axis of the machine.

C C the wheel.
P P P three of the blades seen in section.
D D D the water-box.
E E E the conduit-pipe.
A A A the system of levers working on the pivot B.
R a rod communicating with the interior of the sawmill.
W a weight which causes the trap-door to shut of its own accord when the rod R is let go.

FIGURE 2 shows the projection on a vertical plane parallel to the central axis.

L L the arms that connect the wheel to the shaft V.
T the trap-door as it appears when closed. The central portion of the wheel is omitted to show the water-box in position.

Education of Foresters in Britain.

TO THE EDITOR OF THE "INDIAN FORESTER."

SIR,—I was much gratified by seeing in your number of July 1876 (under the head of Transactions of the Scottish Arboricultural Society) some excellent remarks about the education of Forest officers at home.

Of such importance is this subject that, while interested societies at home are agitating in a wrong direction, it becomes the members of the Forest service in this country to speak out very clearly and unanimously as to what their feeling is on the subject.

Every body who has ever known Professor Balfour will bear testimony to his great botanical learning, his zeal and talent, his kindly courtesy, and the great interest he takes in promoting the cause of arboriculture. I shall therefore be at once acquitted by every reader of any desire to depreciate his exertions, or to undervalue his authority; but, on the other hand, it must be remembered that Professor Balfour's experience is that of a botanist, and also as a practical superviso of

one of the best kept and most interesting arboreta and living botanical collections which we possess, but that he is not a Forester; and when he compares the possibilities of Forest education in Great Britain with the advantages of the Continent, he is speaking in almost complete ignorance of the Forest country, the Forest system, and the Forest schools of France and Germany.

All Forest work in England and Scotland consists almost entirely of planting work; hence the distinction between "sylviculture" and "arboriculture" is not understood or appreciated; and where such work extends to the treatment of Forests, it is chiefly concerned with artificial forests or plantations, of larch cut for hop-poles (a very paying crop) with coppices of chestnut, ash, &c., or with timber growth of Scotch fir, larch, and other species, over limited areas of generally uniform growth, age, and condition, and which are all cut in even blocks or strips at a known age or else by "selection" based in either case on the "feeling of propriety" of the operation in the breast of the practical supervisor. The felling done, the land (if destined to be kept as forest) is ultimately replanted artificially or allowed to coppice, as the case may be.

Of large areas of natural forest, often subjected to a long course of previous ill-treatment, and now destined to be put under a restorative treatment,—on which too the country is absolutely dependent (both as regards local and export consumption) for a variety of products, the British forester knows absolutely nothing. No such areas exist in the country, and consequently no forester in Great Britain has ever been called on to treat such areas either theoretically or practically.

British foresters, and *à fortiori* British Botanists who are not foresters, are therefore completely out of court, when attempting to argue on the requirements of training in a service destined to deal with large tracts of forest land of this class.

It is perfectly true that botany (systematic and physiological), surveying, the arts of draining, planting, thinning, felling, &c., are of the highest importance, but they are only detached parts of the subject, and the mere fact that *the* great points—the "weightier matters of the law" *viz.*, the preparation

of "working schemes" for forests, and the treatment of forest on the system of natural regeneration, are *not even alluded to* in the curriculum of studies, is not only sufficient in itself to prove what I above urge regarding the necessary incapacity of foresters of only British experience to understand our Indian requirements, but shows further that, if the Forest officer came out ever so well trained in the proposed course, he would still be ignorant of his chief duties.

It must not be supposed that I am casting any slur on the well-deserved reputation of many English and Scotch foresters *in their own line.* It is not the British forester's *fault* that he has no large areas of natural forest to deal with, no rights and privileges to be provided for,* no immense tracts once stocked with valuable timber which have to be led back into a condition of productiveness and so forth, any more than it is the *fault* of England that it does not produce the silks of Lyons, or the tobacco of Havanna. And therefore I cannot conceive why it should be resented by any one as a hard saying that British forestry is incompetent for Indian requirements.

We go to France and Germany where there are schools teaching forest management (in the enlarged sense of the term) not because we love foreign things and despise those at home, *but* just as we go to foreign markets, because they produce what we do not. We do not think it a reproach in the one case, why should we in the other?

It is very natural that Arboricultural and Agricultural Societies in England and Scotland should be eager for the "Kudos" of granting certificates or diplomas, and glad of the fees and funds which the entrusting of Forest education to their care would bring them in; and that they should be anxious for the increased status and importance which they would thus acquire. But those who have the settlement of the educational question, should bear in mind that these natural (and in

* Of course, I am fully aware of the difficulties of the New Forest question and of the rights of common, &c., &c., which have to be dealt with, in proceedings under the Enclosure Acts: but that is quite a different thing from managing forests with a view to the yield of various classes of materials for right holders and communities having rights.

themselves very proper) desires constitute the advocates of home education in most cases extremely interested, and therefore very partial judges: and this very eagerness and interest induce them to undervalue excessively those elements of Forest training which *we* know to be essential, but which they do not in the first instance realize at all. What a man does not know much about, he will surely doubly undervalue, when his interest would lead him to undervalue it even if he did know it.

There is also another point; surveying, planting, pruning, and felling can all be learnt in India; the first (for our purposes) perhaps better than at home; the second, to an extent which is every year improving. The management of artificial plantations of conifers is still indeed in a backward state in India, and visits to Scotland, where this work is unequalled, are very valuable:* but this will not always last. It will however be some time yet before we can produce either in India or in England or Scotland, men who could teach or lecture in schools, and illustrate out in forests (in various stages of treatment, conversion, and restoration),—the principles on which plans of treatment, yield, and improvement (on natural regeneration systems,) are based, or the modifications to which such plans are subject by the necessities of consumption and demand.

As soon as we have in Great Britain forests to illustrate practically, and teachers to produce theoretically such works as the "Cours d'aménagement des forêts," of Professor Nanquette, the "Forsteinrichtung," of Judeich, the Anleitung zur Ablösung der Wald-Servituten" of Dr. Pfeil, and the works on Reboisement and mountain torrents of Surell, &c., we may begin to talk with confidence of the possibility of educating Forest officers at home.

At present, for no faults of ours but from circumstances only, it is impossible.

I am, SIR,
Yours obediently,
J. K.

* And now forms a part of every course of instruction after the continental course is over.

The Cultivation of the "Eucalyptus Globulus" and other Australian Gums in India.

For many years past the Government of India has been importing large supplies of seeds of the trees of this family, and chiefly of the *Eucalyptus globulus* (blue gum). These seeds have been widely distributed with the object of acclimatizing such useful trees in the parts of India best suited to their growth. The experiment has not been particularly successful, and in fact it may be said that the trees have lived only in two places, the Nilgiris and Ranikhet. In the Nilgiris their cultivation has long passed beyond the experimental stage. I have seen it stated somewhere that in places the growth of these trees has quite changed the aspect of the country. Official reports all testify to the rapid growth of the Australian gums. In the Madras Forest Report for 1868-69 it is stated of the blue gum that "its rapidity of the growth on these hills exceeds that of any tree indigenous or introduced, and has been the admiration of all forest officers who have visited our plantation." This rapidity of growth was particularly noticed in the sholas, and it was recommended that as these were thinned out for firewood they should be renewed with this tree. "It exhibits the most favourable growth when planted inside sholas of the indigenous trees (particularly in the ravines), as it soon overtops all the native trees, and it has complete shelter from the wind when young. One tree in such a locality in the grounds of Gayton Park at Ootacamund is quite a sight: it is upwards of 12 feet in girth and of enormous stature." The Commissioner of the Nilgiris wrote in December 1869: "It may be said to be established that certain species of the *Eucalypti* grow splendidly on the Nilgiris and four times as fast as the teak-tree grows anywhere, and that the timber of the *Eucalyptus* is at least equal to teak for the various purposes for which teak-wood is wanted." The following is an account given in August 1868 by the Conservator of Forests in Mysore of the Nilgiri plantations of

Madras.

Eucalypti visited by him in company with the Madras Conservator:—

1. "I have the honour to report, for the information of "the Commissioner, that I lately visited the Government "plantations (at Ootacamund) of *Eucalyptus* and other useful "timber trees, chiefly exotics.

2. "Major Beddome, the Conservator of Madras, at my re-"quest, kindly took me over them, and gave me much valua-"able information. I would respectfully suggest that, if the "Commissioner should consider the experiment worth trying, "seeds of the various kinds of *Eucalypti* might be obtained "from the Australian Government, and these valuable timber "trees be introduced into Mysore.

3. "In the plantation we first visited, about forty acres "had been planted out with the *Eucalyptus globulus* (blue "gum). The planting was commenced in August 1865, and "the trees had grown capitally. I measured two trees planted "out (seedlings) in 1865. One measured twenty-four feet, "the other thirty feet, to the top of the terminal shoot, and in "girth respectively, thirteen and eighteen inches. Major Bed-"dome tells me the timber is equal to teak, and, in spite of its "rapid growth, is good close-grained wood. The growth, in "the Ootacamund climate, of this tree is almost incredible. In "the public gardens is a specimen of *Eucalyptus globulus* now "twelve years old. It is about 100 feet in height and measures "six feet in girth, nearly, at three feet from the ground. This "specimen branches low; but it was grown as an ornamental "tree, not for timber. To thrive well, the *Eucalyptus* requires "an elevation of 4,000 feet; several sites could be found in "Coorg, Munjerabad, and Nagar, for its propagation. It is "very hardy. In the plantations I visited, there had been "scarcely one casualty in the first year; last year some young "trees had been killed by frost, especially those in low and "marshy ground. But, apart from the frost, the tree flou-"rishes best in damp ground; the largest tree in the plantation "grew close by the side of a stream, and its roots were entirely "surrounded by water.

4. "The manner of propagation is as follows: Nursery beds "having been prepared, the seeds are sown broadcast (gener- "ally in December or January in Ooty), and covered lightly "with earth to the depth of quarter of an inch. They are "watered copiously. When about three months old, they are "taken up, the roots covered up with earth, and then with moss, "and the plants are in that state placed in fresh beds, or even "(in this climate) simply under pandals, without being put "into the earth. Here they remain for about a month to re- "cover themselves, and they are then planted out in pits or "trenches, each plant being six feet distant from the next. The "dimensions of the pits and depth of the trenches varied "considerably. Some of the pits were three feet cube, "others only eighteen inches cube. The depth of the "trenches too varied from eighteen inches to thirty-six "inches. A uniform depth of two feet and breadth of two "feet for the trenches, or pits two feet cube, would perhaps "be the best. If the spot where the seedlings have been planted "out is well protected from the wind, they require no further look- "ing after. Should, however, the wind get at them, it is found "necessary to remove almost all the leaves, as the plant is apt "to get top-heavy, is blown over and injured. Being planted "out only six feet apart, they draw each other up, and require "no pruning, the lower branches dying off naturally.

5. "If introduced into Mysore, we could not moss the "plants. Major Beddome advised my using bamboo pots, "which have answered well up here. The young seedling, on "being first moved, is put into the bamboo, which is then plac- "ed on the ground under the shade of pandals; when the "time for planting has arrived, the young plant is pushed out "with a stick.

6. "We then went on to Major Morgan's plantations. "Here I saw a thriving plantation of *Eucalyptus globulus* aged "seven years. I measured one specimen. It was four feet "in girth at six feet from the ground, and seventy feet high, "measuring about twenty-five feet to the first bough. The "girth of this specimen was exceptional, but there were several

"hundreds of trees which would have measured about three feet "or three and quarter feet in girth. They were all well grown, "with clean stems, and had never been pruned. They stood at six "feet apart, and Major Morgan has this year commenced thin-"ning them out. Grass grows well under the shade of these "trees.

7. "At Major Morgan's plantations I saw specimens of "*Eucalyptus globosa, E. peperetta, E. citriodora,* several kinds "of stringy barks, all *Eucalypti* from Australia. They were "growing well. Major Beddome advises the introduction of "the following trees as the best known timbers: *Eucalyptus* "*globulus, Eucalyptus sideroxylon,* and *Eucalyptus marginata*— "a valuable timber and said to be obnoxious to white-ants.

* * * * * * *

"The leaves of all the *Eucalypti,* especially when the plants "are young, are full of oil glands. The *Eucalyptus globulus* "leaf has a strong taste of camphor, and goats even will not "touch it."

Large plantations have since been formed by the Forest Department on these hills, and have succeeded admirably. In the plain districts of Madras, however, the attempt to grow the Australian gums has been a complete failure. Repeated notices have from time to time appeared in the public journals on this subject, but the last notice I find is the following quotation from a recent report by the Sanitary Commissioner for Madras:—

"I observe in the newspapers that the subject of the culti-"vation of the *Eucalyptus globulus* in marshy places has been "under consideration with reference to the drainage of village "sites and protection of the health of the people in the Goda-"very district. As the order of Government on this subject "has not been communicated to me, I am not able to submit "any remarks on it; but in regard to the general question of "the cultivation af the *Eucalypti* in the plains of India, I "have the honour to state that the experiment is almost cer-"tain to fail. Looking to the importance of introducing "malaria destroying trees, I have personally been endeavour-"ing to grow the *Eucalypti* in Madras, but, so far, without

"any hope of success. The seeds germinate, and the plants "grow rapidly under shelter, but they seem unable to bear "the great solar heat and die off when planted out. They "thrive but indifferently on the elevated palteau of Mysore "and it is only in our hilly ranges, with elevations of 4,000 "feet and upwards, that they appear to grow vigorously. "Judging from the results of experimental trial of these trees "in Madras, I do not think there is any chance of their flou-"rishing in the delta of the Godavery river. But while the "cultivation of the *Eucalyptus* in the Godavery district may be "impossible, there are plenty of trees which may be substituted "for it. The supposed virtues of the *Eucalypti* in neutrali-"sing miasmata are probably exaggerated, and whatever "power they have in this way is possessed in common with many "other resinous-odoured plants, like casuariana, mango, jack, "&c., which grow freely in the plains, wherever they are plant-"ed and taken care of. I would submit, therefore, that the "spending of money on an exceedingly doubtful experiment, "is unadvisable, when experience has shown us that trees of "similar properties with the *Eucalypti* may be raised with "every prospect of success in the eastern coast deltas."

Major Beddome, the Conservator of Forests, is of opinion that the *E. globulus* cannot be grown in the latitude of the Madras Presidency lower than 4,500 feet. Colonel Morgan, Deputy Conservator in the same presidency, says that *E. globulus* is best grown at an elevation of 6,000 to 7,000 feet; the red gum (*E. rostrata*), at 5,000 to 6,000 feet; jarrah (*E. robusta*), at 4,500 to 6,000 feet.

Mysore and Coorg.

The experiments made by the Conservator of Forests in Mysore have not been successful. The first sowings in 1870-71 failed, owing, it was said, to a large proportion of the seed having lost its vitality before receipt in India. In 1871-72 plantations of blue gum were commenced in Nagar "with poor success, as out of 6,490 seedlings transplanted, 5,816 died." In 1872-73 the annual report informs us: "The exotics, chiefly Australian, introduced into the plantations, have failed in large numbers, and those which have so far succeeded require special care. The

attempts to grow the jarrah (*E. rostrata*) in Nandidrug have been successful so far, and the young trees look very healthy.

Bombay and Sindh.

In Bombay, as far as we know officially, no attempts have as yet been made to introduce these trees; but I see it stated in a newspaper that the *Eucalyptus globulus* is thriving in the Victoria Gardens in the town of Bombay. The Commissioner in Sindh has circulated a paper recently written by Dr. Morton recommending the cultivation of the *Eucalypti* in that province, and he has sent for a large quantity of seed with which to commence experiments wherever possible.

Bengal.

In Bengal all the attempts made to grow the *E. globulus* in the Botanic Gardens have failed. The seed sown has often germinated without difficulty, and in quantity. Plants have also attained the height of eight or ten feet, but then they die out. Dr. King says that the chief difficulties of cultivation begin when the roots have become sufficiently long to reach the water-level. He attributes the failure of the tree to the high water-level in the sub-soil, the high temperature, and the alluvial nature of the soil of the province. Recently on a suggestion made by a native newspaper for the cultivation of the *Eucalyptus globulus* in the fever-stricken tracts of Burdwan and Hooghly, a letter was written from this Department to the Government of Bengal, No. 489, dated the 7th May 1874, an extract from which is appended :—

"Although the alleged anti-miasmatic properties of this tree "are problematic, there is no doubt that the introduction of fast-"growing aromatic trees, like the gum-trees, which moreover "produce serviceable timber, can only be advantageous. The "species of *Eucalyptus*, which grow luxuriantly on the Nil-"giris, and which are cultivated in Provence and Algeria (*E.* "*globulus*, *obliqua*, and other species), are from the temperate "climate of Tasmania and the southern parts of Australia. These "do not thrive at Calcutta, and would not thrive in the Burd-"wan district. But there are numerous species of this genus "which inhabit North Australia, Queensland, and other parts "of tropical Australia, which, the Government of India is

"informed, have been cultivated in the Calcutta Botanical Gar-
"dens, but hitherto without success; and I am to suggest for
"His Honour the Lieutenant-Governor's consideration that
"Dr. King might be encouraged to persevere in his attempts
"to introduce the gum-trees of tropical Australia."

Dr. King says that even these species have never succeeded in Calcutta, but he has sent for seed in order to carry out the experiments suggested, and promises to report the result. There are now, Dr. King reports, about sixty or eighty gum-trees in the garden, many of them being from fifteen to twenty feet high.

It is understood that the experience of the Calcutta Agricultural and Horticultural Society is much to the same effect as Dr. King's.

Assam.

In Assam the only record of an attempt at the cultivation of these trees that I can find is recorded in a recent report of the Agricultural and Horticultural Society. Dr. Imthurn, stating the result of an attempt to grow the *Eucalyptus globulus* at Tezpur, Upper Assam, writes as follows:—

"I found it impossible to get the seeds to germinate in the
"open, apparently owing to the soil being too moist.

"Sown in pots, the seeds germinated pretty freely (from one-
"third to one-half of the number sown). The time required
"for the germs to appear above ground was from five to twelve
"days, generally nearer the former term. The young plants
"unfortunately look weak and premature, and are very slow
"in making leaves.

"The stalk bearing the cotyledons seems to have grown too
"fast, and proves too tender. Heaping up fine earth round
"the stalk does very little good beyond preventing the stalks
"from bending under the weight of the cotyledons.

"I have often noticed the same premature state with cold
"weather plants, which I wanted to raise during the rains so as
"to have early seedlings. Its causes are, as far as my experi-
"ence goes, either—

"Too rich soil or
" much humidity, or
" little light (reflected or directed) or
" high temperature.

"I have varied my experiments so as to satisfy myself that "the premature state of the young *Eucalyptus* plants is not "due to any of the first three causes just mentioned, and it "seems, therefore, that the high temperature was the cause of "the weakly state of the young plants."

These remarks having been referred to Mr. Kurz, of the Royal Botanic Gardens, he said that in his opinion the failure of *Eucalyptus globulus* in Assam was ascribable both to too great moisture and heat.

"It is true that the tree grows best in moist valleys of Vic-"toria and Tasmania, and must there be subjected to a good "deal of dry heat during the hot season; but still the distri-"bution, which ranges from 37 degrees to 44 degrees south lati-"tude, indicates its unfitness for the Assam climate, while it will "no doubt prosper in the North-Western Provinces, &c., and still "better in the Mediterranean countries.

"Dr. F. v. Mueller has sent us another species less temper-"ate than the above, *viz.*, *E. rostratus*, and I enclose a few "seeds for Dr. Imthurn for an experiment in Tezpur. Dr. "F. v. Mueller thinks that this is the best kind for tropical "regions in India, and possibly Dr. Imthurn may be inclined "to try it and let us know by-and-bye with what results."

These seeds were sent with Mr. Kurz's remarks to Dr. Imthurn.

North-Western Provinces.

In the North-Western Provinces, Kumaun is the only locality where experiments have been officially tried. In his report for 1870-71, the Conservator wrote:—"The climate and soil of Ranikhet are evidently well suited to the Australian gum-trees. We have now gained considerable experience in the cultivation of these very valuable trees, and I am convinced that the best mode is to break up patches of ground and sow the seed broadcast on the spots the trees are to remain on; for although the young saplings are not killed by transplanting, their growth is very considerably delayed. The seed should be sown in the rainy season, and it will then germinate in about eight or ten days. The blue gum is doubtless the quickest grower, and will do well enough for fuel; but I

doubt its being of much use for timber, and I am rather afraid that it will be liable to get broken by the severe gales of wind peculiar to the Himalayas. . . . I have directed Mr. Craw to break up open patches of ground in the forest and sow all the gum seed he has, and next year I mean to go on with this work on an extensive scale, and there are many acres of small open spaces on the Ranikhet hill which I hope to get covered with gum-trees in this way."

He was also going to try further experiments at Chakrata.

In 1871-72, Mr. Craw reported from Ranikhet:—"7,600 gum-trees have been planted in cantonments, and with few exceptions are doing well. * * * In February last, about 300 gum seedlings were taken from the Ranikhet nursery and planted at Mohahu (Kumaun). By the end of June, these little trees had grown from four inches to six feet in height, but I have since heard that many of them died soon after the heavy rains set in. If this is the case, the gum tree will not do in such a damp climate as the Bhabur. A small quantity of gum seed was sown near Chakrata, but the heavy snow of last winter rotted it, and not one single seedling appeared. However, I fear the gum-tree is not suited to that cold and bleak climate."

Mr. Craw's last available report, dated 26th March 1873, shews that he had then between 15,000 and 16,000 gum-trees, and was expecting a large increase to his stock from fresh sowings. He considers that they have become acclimatized at Ranikhet, and gives some measurements in support of his opinion. The oldest of the gums, planted in August 1869, was 30 feet high when he wrote, and a number of others planted in August 1870 ranged from 15 to 20 feet, the average being nearly 18 feet. He finds the seeds succeed best when sown in early spring. The young plants thus attain a few inches in height before the rains set in and are not liable to rot off in the seed beds or in transplanting, which they do when from any cause the sowing has been unseasonably deferred.

Colonel Ramsay says that the *Eucalyptus* grows admirably at Naini Tal at an elevation of 6,700 feet, and at Donagiree

at an elevation of 6,500 feet, "therefore" he says, "it may be fully admitted that it does not suffer from the frosts to which hills to a height of 7,000 feet are liable." Captain Birney in a small experiment found the *E. globulus* the quickest grower of the seven gums he tried, it attained a height of six feet in one year.

Punjab.

In the Punjab repeated attempts have been made by the Forest Department to raise the various species of this genus. In his *Punjab Plants* (page 93) Dr. Stewart says:—"These Australian trees have as yet not been found easy to raise in the Punjab, although improvement is taking place in that respect. But several of the trees, which have succeeded at Lahore and Madhopur, where they were first introduced in 1860 by seed obtained from Dr. Chalmers, have grown at least twice as rapidly as the ordinary Punjab trees."

Dr. Stewart does not specifically mention the blue gum, and it is not probable that this was one of the kinds which he mentions as having succeeded. Seeds of *E. gigantea* (from Adelaide), *E. sideroxylon* (iron-bark, from Victoria), and other species have been obtained from time to time and tried in the Changa Manga plantation without success. The blue gum always failed. Writing in April 1870, Mr. Baden-Powell reported that the experiments had been "so very satisfactory that a more systematic effort to grow the tree on a large scale is desirable." He said that *E. sideroxylon* had been very successful. Further experience however caused Mr. Powell to change his opinion. In February of the present year he wrote: "The only place we grew gums was at Changa Manga, and the plantation officers there have tried all sorts of species. We obtained a large amount of seed, gave it a fair trial, and concluded that our plains do not suit the *Eucalyptus* species, but that the lower hills would be their proper place." Of the *Eucalyptus globulus* he said: "It is *the* most difficult of all the gums to rear in the plains. They have been tried and always failed at Lahore. I had one, I think about the third or fourth in all Lahore, that survived and grew just as Mr. Hume describes, in a hectic, unhealthy sort of way." These remarks were made

on a request from the Government of the Punjab for seeds of the blue gum, which Dr. Scriven, attracted by the newspaper reports of the properties of the tree, wished to try in the central jail. He also recommended its being planted along the banks of canals in those districts where the canals had increased fevers. This Department asked the Government of the Punjab to enquire into the results of the trials made at the Changa Manga plantations, saying that if after considering them it was of opinion that further trials would be useful, the application for seed might be renewed. This was last February, but no further communication on the subject has been received from the Punjab. There is a blue gum at Simla in the grounds of the Simla Bank. It is not a particularly good specimen, but its existence shews that when once established the tree can stand frost fairly well. This tree is some years old. I sowed a quantity of blue gum seed at Simla in the spring of last year. The plants grew rapidly, and I gave away a number of them when they were about a foot high. Those that I kept stood the winter fairly, though it was very severe, and were in good condition when I left at the end of January. But it was evident that if they had not been sheltered the seedlings would have perished, and it seems certain that the frosts of Simla are too severe for the tree in the early stages of its growth to admit of its satisfactory cultivation on a large scale at that altitude.

Oudh.

In Oudh the *Eucalyptus globulus* has been tried without success by Dr. Bonavia. In his report for 1873-74 on the Lucknow gardens, he writes:

"So much has been written lately about the *Eucalyptus* that "a few words upon it may not be uninteresting. Several years "ago some seed which was ticketed *E. globulus* germinated well, "and several of the plants throve and were planted out. Most "of them died one rainy reason. Two escaped and grew to "about 30 feet high. The leaves had a bluish bloom on them "and were very fragrant. The leaves of the lower part of the "tree were totally different in shape from the upper ones. Both "these trees died during a subsequent rainy season. I have "now in the Horticultural garden 22 trees of another kind of

"*Eucalyptus*, which Dr. King, the superintendent of the Royal "Botanic Garden, thinks is the *Marginatus*. If so, he states "it is a very valuable timber tree and equal to the mahogany. "This kind thrives very well. Some specimens, I should say, "are about forty feet high. They don't mind the hot winds, "the rains, or the frost. Some have flowered but not seeded yet. "This may be a good kind to introduce into the Oudh forests."

We have no record of any other attempts to introduce the the blue gum into Oudh.

Central Provinces.

In the Central Provinces the only attempt made, as far as we know, is a recent experiment by Colonel Wood, Deputy Commissioner of Sironcha, who brought out a large quantity of seed with him after his return from furlough, meaning to introduce the tree in the Central Provinces. I can find nothing as to the result of this experiment.

Nicobars.

The only other place where, so far as our knowledge goes, *E. globulus* has been tried is in the Nicobars. The seedlings appear to have done fairly there yet, but the success of the experiment is problematic. A report has been called for after a year's experience.

Thus it appears that after repeated experiments the *Eucalyptus globulus* has succeeded only at Ranikhet in the North-Western Provinces and on the Nilgiris in the Madras Presidency. Even in Mysore and Coorg, at an elevation which might have been supposed not unfavourable to the tree, it has failed. Heavy charges have been incurred from time to time on account of the importation of seeds from Australia, and it seems questionable whether it is worth while going to much further expense in the attempt to introduce the tree on the plains of India. It is a native of the cool, temperate zone of the Australian continent and Tasmania, and its unsuitability to the tropical plains of this country seems now manifest. It might probably succeed well on the lower ranges of the Himalayas. In these localities it is hardly wanted as a malaria-destroying agent, but it might be useful in the reboisement of such bare places as the chain between Kussowlie and Simla. The aroma-

tic emanations from the tree are so strong that it is said cattle will not touch it. In this respect and in its extremely rapid growth (at Ranikhet the growth of a particular tree during the course of a year measured no less than 18 feet) it possesses great advantages.

Certainly, if the tree possessed all or even half the virtues currently attributed to it, Government would be bound to make the most strenuous efforts, without reference to cost, for its universal establishment in India. Here is a list of some of the virtues ascribed to it: When thickly planted in marshy districts the subsoil is speedily relieved of its superabundant moisture as if by pipe-drainage, the tree absorbing daily ten times its own weight of water from the soil. Miasma ceases wherever it flourishes, and fever flies before its face. The healthiness of the Australian climate is caused by the emanations from the tree. The bark and leaves possess febrifugal and antiseptic properties. It is valuable as a disinfectant and as an active agent in the treatment of diseases of the larynx and of the mucous membrane generally; its leaves make a good lozenge for the throat, and baths in hot water, in which the branches and leaves have been infused, remove rheumatic pains, neuralgia, and the debility left by malaria. It is praised as a perfume (to which the name *Eucalyptol* has been given) and as a cigar to promote digestion and for bronchial and asthmatic affections. And last, but not least, it has been discovered to be an infallible remedy against the phylloxera vastatrix, thus: inoculate the vine attacked with the pure essence of *E. globulus*, and in three days the phylloxera entirely disappears, while the vine is uninjured. It is not stated that the abbé who made this great discovery has claimed or received the reward of three hundred thousand francs offered by the French Government.

This catalogue of the virtues of the blue gum makes one think of the wonderful powers supposed three hundred years ago to be possessed by that "most holy herb," tobacco. Clearly such statements want confirmation before they can be accepted. They bear indeed on their face the mark of exaggeration. In one of the papers in which an account of the properties of the tree is given, it is stated that the British Government has

largely grown it in India and on the west coast of Africa with astonishing results in the diminution of fever. Now we know that in India no such results have been obtained, and on the west coast of Africa attempts are only now being made to introduce the tree, and Dr. Hooker is very doubtful of its succeeding there. Mr. Broughton, Government Quinologist at Madras, has examined the bark and leaves of the tree with the result stated in the report to the Government of Madras appended, dated 29th May 1872:—

"Much has lately appeared in the papers and quasi-scientific journals concerning the valuable qualities of the *Eucalyptus globulus* as a febrifuge. In the *Lancet* for 20th April 1872, a notice is given of the uses of this tree medicinally, in which it is stated that all parts are most valuable as a febrifuge medicine, and also that the leaves, when "smoked, are most efficacious in allaying pain, calming irri-"tation, and procuring sleep. This article furthermore in-"forms us that Professors Vauquelin Leiciana obtained an "alkaloid from the bark which crystallized like quinine as a "sulphate, and which yielded the ordinary reaction of quinine "with chlorine, water, and ammonia. I have examined the "bark and leaves of the *Eucalyptus globulus*, and have the "honour to state that neither quinine, quinidine, chinchonidine "nor chinchonine is contained in the plant in any proportion."

The only precise instances of the removal of fever by the agency of this tree are those given by M. Gimbert in his paper read before the Académie des Sciences, on which the numerous articles which have appeared in the journals lately have been based. The cases quoted are certainly remarkable if they can be accepted without qualification, but Dr. Hooker, on the other hand, says that he has failed to discover that the reputed virtues of the tree have any certain foundation.

However, without discussing the question of its febrifugal and antimiasmatic qualities, there can be no doubt that the *Eucalyptus globulus* is a very valuable tree. Its timber is excellent, very strong and durable. At the Paris and London Exhibitions the wood was mentioned in high terms as very suitable, from its hardness and durability, for various purposes,

and especially for ship-building, as it resists the attacks of insects in the water. At the Paris Exhibition of 1862, the wood was recommended as well adapted for railway sleepers. M. Trottier, who has written a pamphlet on the cultivation of the blue gum in Algeria (where it is now largely grown), calculates that in eight years a tree would be sufficiently large to cut up into sleepers. In Australia the timber of the blue gum is greatly used by colonial shipbuilders and by millwrights, carpenters, and makers of implements, as well as by engineers in the construction of works requiring beams of great span. Mr. Broughton reports that the tree produces a gum resin in considerable quantities, closely resembling kino in its properties. He found it yield no less than 43 per cent. of tannin, and he thinks it probable that the gum would be found valuable as an astringent medicine. Its growth, as has already been said, is astonishingly rapid.

But if the reputation of *Eucalyptus globulus* as a sanitary agent cannot be confirmed, it will probably be advisable not to waste money in further attempts to naturalize it on the plains. There are many other species of the same family which, as natives of the hotter parts of Australia, will probably succeed perfectly in the plains of India. Their growth, like that of the blue gum, is rapid, and the timber of many (that of the jarrah for instance) is excellent. The propagation of *Eucalyptus globulus* should be confined to those localities which are known to be suited to it.

Appended is a memorandum on the method of planting the *Eucalypti* by Colonel Morgan, Deputy Conservator of Forests in Madras, with marginal notes by Captain Campbell Walker :—

Memorandum on the planting of Eucalyptus, by Colonel H. R. MORGAN, *Deputy Conservator of Forests, in charge of Mudumallai, &c.*

"The seed, which should be procured in January or February, "should be placed in beds in rows 6 inches apart.

2. "When the plants are 6 inches high, they should be "taken up and placed 6 inches apart in beds; the roots should "be shortened to 4 inches.

3. "When 3 feet in height, the plants are taken up with a "ball of earth round their roots, moss is bound tightly round "the ball, and the plants are left in beds well earthed up about "the roots and watered till the young rootlets show through.

4. "They may then be put out. April is the best month "for planting, as the plants are then able to make strong roots "before the monsoon.

5. "When moss is not available, bamboo pots may be used, "taking care to keep the large end of the joint for the top of "the pot; the hole at the bottom to be plugged with grass. "The plants should be placed in the pots when 8 inches in "height, and left till they are 2 feet high and the roots show "through; then thrust the roots through, and the plant comes "out with a ball of earth attached to the roots. Pits should "be 18 inches cube.

6. "In the second year it will be necessary to prune the "trees heavily to remove all sidebranches "but the three pairs at the top.

NOTE.—I do not like to advance theoretical opinions in opposition to Colonel Morgan's *experience*, but I cannot help thinking this pruning might be dispensed with, and the trees left to nature.—C. W.

7. "*Eucalyptus globulus* is best grown "from 6,000 to 7,000 feet elevation; the "red gum (*Eucalyptus rostrata*) from 5,000 "to 6,000 feet; the jarrah (*Eucalyptus* "*robusta*) (*marginata?*) from 4,500 to 6,000 feet. If the situation "is very exposed, place your trees 4 feet apart in trenches 18 "inches wide and deep.

8. "In rich soils thinning may be necessary in the seventh "year; in poor soils, the tenth year. Grass "land is best broken up by heavy ploughs, "and if a crop or two of potatoes or oats "are taken off it, the better for the plants. "A tree of *Eucalyptus globulus* at twelve "years of age in good soil will weigh a "ton."

NOTE.—I have seen plantations in which thinning was absolutely necessary in the fifth year. No rule can be laid down, as so much depends on soil and exposure, and the object for which the trees are grown.—C. W.

J. E. O'CONNOR.

On the cultivation of the different species of Eucalyptus in Northern India, by D. Brandis, Inspector-General of Forests,—Dated Simla, 19th July 1876.

THE following remarks should be read in connection with Mr. O'Connor's memorandum on the cultivation of the species of *Eucalyptus* in India, which brought together all facts bearing on this question which had been reported to Government to the close of 1874:—The data recorded in that note showed conclusively that *Eucalyptus globulus* does not thrive in the plains of Northern India. The seed germinates readily, but the heat of summer, and more than that the damp heat of the rains, was found to be against the tree, and though it may live, and even grow rapidly for a few years, it invariably dies. Dr. E. Bonavia at Lucknow wrote in August 1875 as follows:—"In 1866 I sowed a lot of *Eucalyptus globulus*. They germinated well and all but three died during the rains of 1867. At the end of 1867 the three surviving plants were 8 feet high and in perfect condition. They grew to a height of 30 or 40 feet, and died a few years after during the rainy season." At the Changa Manga plantation in the Punjab, 40 miles south-east of Lahore, *Eucalyptus globulus* has done worse than any of the other species.

The seeds of the blue gum tree which were procured in 1875, and which were sown by the cantonment authorities in Meerut, Roorkee, Sialkot, Rawalpindi, and Peshawur, are reported to have germinated in most cases; but this does not prove that the plants will live more than a few years.

Nor are these unfavorable results to be wondered at, for the home of the blue gum tree is Tasmania and Victoria, between 35° and 43° south latitude, whereas Peshawur, the northernmost of the stations in the plains, is situated in north latitude 34°. The climate of Northern India in the plains is totally different from that of Tasmania and Victoria. The following is a comparative statement of the mean temperature of the atmosphere during the four seasons of the year at Melbourne and Ootacamund on the Nílgiris, where the tree

thrives luxuriantly, and at three stations of North India—Lucknow, Lahore, and Peshawur:—

SEASONS.	Melbourne.	Ootacamund.	Lucknow.	Lahore.	Peshawur.
Latitude ...	37°49′ S.	11°23′ N.	26°51′ N.	31°31′ N.	34°4′ N.
Elevation ...	91 ft.	7,490 ft.	535 ft.	839 ft.	1,280 ft.
Spring ...	57° 0	59°·4	71°·6	78° 0	72°·2
Summer ...	65°·3	56° 6	89°·	88° 7	89° 8
Autumn ...	58° 7	55°·4	78°·	76°·4	74°·3
Winter ...	49° 2	52°·1	64°·3	56°·9	55°·1
Year ...	57°·6	55° 9	76°·	75°·	72° 9

NOTE.—The seasons are as follows:—

	At Melbourne.			*At Indian stations.*		
Spring ...	September	October	November.	March	April	May.
Summer ...	December	January	February.	June	July	August.
Autumn ...	March	April	May.	September	October	November.
Winter ...	June	July	August.	December	January	February.

These figures will show at a glance the great difference there is in the temperature of the Indian stations in the plains as compared with those places where the tree lives and thrives. In order to complete the comparison of the climatic conditions at these places, it would be necessary to examine the temperature of each month, the mean as well as the maxima and minima, and to compare atmospheric moisture and rainfall. This, however, would lead too far at present, nor is it necessary, for the figures already given suffice to show that if we expect to see plantations of the blue gum thrive in the plains of Northern India, we are indulging in sanguine hopes which are not likely to be realized. There are, it is true, certain trees which accommodate themselves in a most remarkable manner to different climates: thus the paper mulberry (*Brous-*

sonetia papyrifera) lives in Northern Europe, in Japan and China, the South Sea Islands and Siam; and the coffee thrives under the heavy rainfall of Coorg and Ceylon, as well as in the dry climate of Arabia and Abyssinia.

But of the Australian blue gum it has not yet been proved that it accommodates itself readily to a climate entirely different from that of its native country. It thrives in Algeria, in Provence, and South Europe generally, and in India on the Nílgiris, at Ránikhet, Abbottabad, and at other hill stations of the North-West Himalaya. At the hill stations of Northern India, up to an elevation of say 5,000 or 6,000 feet in the Punjab and 7,000 feet in Kumaun, the cultivation of the blue gum should be continued, and in the event of land being obtained for the production of fuel for the cantonments of Kasauli, Sabathu, and Dagshai, it will be proper to try the blue gum and other temperate species of *Eucalyptus* on a large scale, together with the two Australian *Acacias* (*Acacia dealbata and Acacia melanoxylon*) which have grown most luxuriantly on the Nílgiris; and in these situations it is not impossible that these exotic species will answer the purpose better than any of the indigenous trees. In the plains of Northern India, Peshawur is the only place where I could recommend that the experimental cultivation of *Eucalyptus globulus* be continued, and even here we are not justified in entertaining any very sanguine expectation regarding its success.

Other species of *Eucalyptus*, from the temperate regions of Australia, have been tried in the plains; but though some of them have answered better than *Eucalyptus globulus*, the success has not been so marked as to justify cultivation on a large scale. At the Changa Manga plantation in the Punjab, where from 3 to 4,000 trees of different species have been planted out from time to time since 1869, and where they have been tended with great care, only about 120 trees were alive when I visited the plantation last April. The plan followed and the experience gained in that place is as follows:—The plants are raised in pots; when a year old they are put out into nurseries, and when two years old they are planted out. They are generally planted out in June, and a large

proportion die the same year during and after the rains. When larger they have a sickly appearance during the hot winds, the branches dry up, and many trees die.

The following are the principal species that have been tried in Northern India:—

I.—*Eucalyptus amygdalina*, Labill.—Peppermint tree—Tasmania, Victoria, and New South Wales. A number of trees, believed to belong to this species, are at the Changa Manga plantation. The largest is 8 years old, and was, when I examined it in April last, 56 feet high, and 27 inches in girth. Good specimens of the same species, but younger, are at the Shadera plantation near Lahore. At Lucknow this species has failed.

II.—*Eucalyptus obliqua*, L'Heritier—Stringy bark (*Eucalyptus gigantea*, Hook. fil.)—Tasmania, Victoria, and South Australia. This species grows well on the Nílgiris, and has been tried at Changa Manga. At Lucknow it has failed.

III.—*Eucalyptus piperita*, Sm.—Peppermint tree, stringy bark—Victoria, New South Wales. Is grown on the Nílgiris.

IV.—*Eucalyptus marginata*, Sm.—Bastard mahogany—Yarra —West Australia. Cultivated on the Nílgiris. At Lucknow this species does not stand the rains.

V.—*Eucalyptus viminalis*, Labill.—Box, peppermint, gum, weeping gum, drooping gum—Tasmania, Victoria, South Australia, New South Wales. Branches pendulous, leaves lanceolate, 3·6 inches long, acuminate, more or less falcate, the lateral veins numerous, parallel, the intramarginal veins close under the thickened edge. Some of the specimens at Shadera and Lahore probably belong to this species.

VI.—*Eucalyptus leucoxylon*, F. Müeller—Iron bark—South Australia, Victoria, New South Wales.

VII.—*Eucalyptus robusta*, Sm.—Swamp mahogany, white mahogany, also called yarra—New South Wales.

These are the more important species of *Eucalyptus* from temperate Australia, which have been introduced into India. Some of them may possibly be found to accommodate themselves better to a hot climate than the blue gum, and experiments to cultivate them should continue to be made on a small scale, where competent supervision is available. But it is essential that these experiments should be made with correctly named seed, and that the original names should be preserved. At present our information concerning the particular species which have best stood the climate of the plains is scanty, because it is extremely difficult, and in some cases impossible, to determine the species from leaf-bearing specimens without flowers and fruit. Thus there are at the Anarkhalli Gardens, Lahore, in front of the Montgomery Hall, a number of fine specimens of three or four species, but it is not certain to which species they belong. The same difficulty exists with regard to some of the trees at Changa Manga. It would be wasting public money to make these experiments with the temperate species of *Eucalyptus* anywhere in the plains, except where competent supervision is available throughout the year, such as the gardens at Lahore, Saháranpur, Lucknow, and some of the plantations of the Forest Department in the plains of the Punjab.

The case is quite different in respect of those kinds of *Eucalyptus* which are found in Queensland and other parts of tropical and sub-tropical Australia. The number of these is considerable, but they are much less known than the temperate species. So much, however, is known that two kinds—*Eucalyptus resinifera* and *Eucalyptus rostrata*—are likely to thrive well in the plains of North India from Oudh to the Punjab. The merit of having first drawn attention to these species belongs to Dr. Bonavia at Lucknow. In his report for 1873-74 he stated that in the Horticultural Gardens he had 22 trees of a kind which was then supposed to be *Eucalyptus marginata*, and regarding which he wrote:—"It does not mind the hot winds, the rains, or the frost."

In a later report of 27th August 1875 Dr. Bonavia states that in 1867 he sowed a lot of *Eucalyptus* seed of

various kinds, that all germinated well, that most kinds died, but that one kind lived and thrived. Of this kind Dr. Bonavia wrote:—"We have some specimens now between 30 and 40 feet high; some are in the Horticultural Gardens, and some in the Wingfield Park. They passed through the very trying rains of 1870 and 1871, and did not perish. They stand our frost well (5° below freezing point) and are not in the least injured by the hot winds. The one which seeded last year is of this kind in the Wingfield Park, and Mr. Ridley states he raised from it about 100 healthy seedlings." In the same report Dr. Bonavia explained his reasons why he believed the two species which had succeeded well at Lucknow to be *Eucalyptus rostrata*, Schlecht, a tree indigenous in South Australia, Victoria, New South Wales, and Queensland. Specimens of the tree in the Wingfield Park (in bud) and of the tree in the Horticultural Gardens (in leaf only) were sent to Kew for identification. The former was named *Eucalyptus resinifera*, Sm., while the specimens from the Horticultural Gardens were identified with *Eucalyptus rostrata*, Schlecht. The difficulty, however, of correctly naming species of *Eucalyptus* from incomplete specimens is so great, that some uncertainty still exists regarding the correct names of these trees.

A species which is believed to be *Eucalyptus rostrata* has succeeded well, and has attained a considerable size in the Nāg plantation in the Amritsar District of the Punjab.

So much, however, may be regarded as probable, that the two species mentioned will be found to thrive in the plains of North India. *Eucalyptus rostrata* is known as white or red gum in South Australia, and as flooded gum in New South Wales. *Eucalyptus resinifera* is found in New South Wales, where it is known as red gum, red mahogany and leather jacket, and it also grows in Queensland.

If therefore the experimental cultivation of *Eucalyptus* is to be continued at the military stations in the plains of North India, then two species—*Eucalyptus rostrata* and *Eucalyptus resinifera*—should be selected, and no time and money should be wasted on experiments with *Eucalyptus globulus* in the plains.

The question naturally arises whether the same beneficial results may be anticipated from the cultivation of these species which have been reported of the blue gum plantations in Algeria and Provence. All the species of this genus which have yet been cultivated in India have one quality in common —an extremely rapid growth. The seed germinates readily, the plants are raised and transplanted without difficulty, and where the climate is suitable, they attain 40 to 50 feet in from six to eight years. Very few other trees are known which grow with such rapidity, and this is the great advantage of the *Eucalyptus*. Should it be possible to grow the species here recommended on low and moist ground, they will doubtless have a beneficial effect in drying such places, just as plantations of spruce are made with much success in Europe to dry low, swampy stretches of ground which are imperfectly drained. It remains to be proved whether the sub-tropical species of *Eucalyptus* can be raised in damp and badly drained places in the plains of India; but under all circumstances it will be a great advantage to raise rapidly belts of trees as a protection against hot winds, or for other purposes. A most useful work was commenced a few years ago to improve the condition of the station of Nasirabád by planting a belt on its west side to afford shelter against the hot parching winds and drifts of sand. Unfortunately, owing to the difficulty of obtaining land, and other circumstances, the work could not be continued. But if the two species of *Eucalyptus* here recommended, or any other species were found to thrive at Nasirabád, the raising of such a protective belt would be greatly facilitated, in case at some future time the work were resumed.

Whatever the facts may have been upon which Dr. Gimbert based his remarkable communication to the Academy of Sciences at Paris regarding the sanitary effect of blue gum plantations, the extremely rapid growth of the tree would go far to explain some of the facts reported by him. We have many instances in India of the effect produced upon the sanitary condition of a place by changes made in the surrounding vegetation. As a rule, it is true that effectual clearances seem to make a place less feverish and more healthy. This, at least,

is the case in the tropical parts of India. The climate of Akyab was notoriously unhealthy, and at certain seasons almost fatal to Europeans, until Captain (now Sir Arthur) Phayre, while Commissioner of Arrakan, took measures to convert nearly the whole waste land and jungle around the station into paddy fields, and this change had a marked and most beneficial effect upon the salubrity of the place. It is also true that the plantation of Changa Manga in the Lahore District has been extremely feverish since the sissoo has grown up into a forest, while fever is not more prevalent than formerly in the open rukhs which surround the plantation. On the other hand, it seems to be acknowledged that, in the open country in the plains of North India, stations are improved and become more healthy by the planting of trees. If this is admitted, then obviously the object desired is gained in the shortest time by planting those species which grow most rapidly.

It still remains to be proved whether the blue gum has any other qualities beyond its rapid growth which would explain its supposed beneficial effect upon the sanitary condition of places where it has been planted. Its leaves are highly aromatic, but so are the leaves of other species of the same genus. At all events *Eucalyptus globulus* does not thrive in the plains of North India, while the two species here recommended may reasonably be expected to succeed, and under these circumstances I would recommend that they be planted. Such plantations should at first be on a small scale, so as to ascertain the treatment they require, and as long as the operations are in this experimental stage, they should not be undertaken anywhere, except where competent supervision is available throughout the year. Few things are more calculated to waste public money and to lead to erroneous conclusions than to make such experiments, all over the country without competent and efficient supervision. The public gardens at Lucknow and Saháranpur, the public gardens of a few cantonments, the plantations in the plains of the Punjab under the Forest Department, and the Anarkhalli Gardens at Lahore afford sufficient opportunities for making these experiments.

At a later stage, when the best mode of treatment is known, and the requirements and manner of growth of the tree have been studied, regular plantations may be established on a larger scale wherever they may be considered necessary.

The present recommendation relates to two species only —*Eucalyptus rostrata* and *Eucalyptus resinifera*; but there are many others which inhabit the tropical and sub-tropical regions of Australia, and which probably may with advantage be introduced into India. Many of the species of this genus produce a hard, heavy, and durable wood, which is much prized for building in Australia, and which, though it may perhaps be apt to split and warp in the climate of Northern India, will always be useful as fuel. Although therefore we must not hope so far to educate the blue gum of Tasmania and Victoria as to make it grow and thrive in the plains of North India, the introduction of other species will probably prove an important and beneficial measure.

On a new test for ascertaining the Season at which Timber has been felled.

A PAPER presented by M. Prillieux to the Central Agricultural Society of France contains some interesting observations on the means of ascertaining the season in which the trees that produced timber offered in the market were felled in forests. The season in which trees are felled seems to exercise a great influence on the durability of timber used for building purposes. Timber obtained from a tree felled at a season when the sap is in full flow is, it is believed, more susceptible to decay than timber from a tree felled in winter. This belief is general and of ancient date, and it is confirmed by daily experience and by the results of several inquests held under orders of the Courts (in France) for ascertaining the causes of decay in timber used in newly constructed buildings.

But if architects and builders are unanimous in recognizing the danger there is in using indiscriminately wood obtained from trees felled when in full sap, they are also absolutely without the means of telling the difference when once the timber has

been promiscuously stored in depôts. Builders are therefore in a very sad predicament; since they know that the quality of the wood varies markedly according to the season in which the trees are felled, and yet they have not the means of distinguishing the quality of the timber they use. On this point however pure science is able to co-operate successfully with practice, and the question of practically determining the season in which trees have been felled may be solved by following the indications furnished by vegetable anatomy and physiology.

We know that in living plants the organic elements of nutrition which are assimilable, are, during the season of active vegetation, formed in superabundance, *i.e.*, in excess of requirements of nutrition. During summer and autumn this surplus is deposited in reserve for future use in the cellular tissue or *parenchyma*. Sometimes these organic substances accumulate in the form of sugar as in the case of the beet root: but more frequently—and especially in the case of trees—in the shape of starch in deposit in the cells of the pith and of the woody cylinder (medullary rays and woody parenchyma). In spring when vegetation recommences, these organic assimilable substances are absorbed and used up in the process of growth, during the interval which must elapse before the leaves are fully developed to perform their functions.

Such being the normal course of vegetation, it is only reasonable to suppose that on examination we should be able to detect in those wood cells which are the special storehouses of such substances, some marked difference of appearance which would inform us whether the trees were felled in winter or when the sap was in flow. The investigation was full of interest. M. Prillieux was enabled to experiment on samples of oak timber of known origin, that is to say, where it was known for certain what samples were felled in winter without sap and what were felled in spring. He found that wood from trees felled in winter (when the sap is dormant) contains in the cells of both the medullary rays or of the *prosenchyma* abundance of starch in minute grains called starch granules, whereas the cells of wood felled when the sap was in flow, on the contrary, contained none. The property which a solution of

iodine possesses of turning starch to a violet colour permits us to detect the presence of the latter in wood and especially in oak, in which large medullary rays exist easily visible to the naked eye. In this case the presence of starch is visible without the aid of a microscope. If a transverse section of wood felled in winter be treated with a weak solution of iodine it will shew the medullary rays in the shape of dark lines (nearly of the color of ink) which are thrown out in relief from the yellowish surface of the section. This is due to the discoloration, under the effects of iodine, of the cellulose fibres, cells and vessels of the wood containing starch. No such result is to be seen in a section of wood felled when in sap and subjected to the same treatment with iodine. In the latter case the whole surface of the section remains of a uniform yellowish color; and the medullary rays of the wood are only distinguishable by their lighter shade.

When sections of timber treated with iodine, as above explained, are viewed through a microscope, the cells of the wood rich in starch are clearly visible, and the presence of the organic assimilable substances is also easily discernable, not only in the medullary rays, but also in the woody cells. In many doubtful cases the use of the microscope may be necessary; but in the few experiments made by M. Prillieux on specimens of timber felled at different but known periods (some during winter, others during spring) the indications described were clearly visible to the naked eye.

This test therefore offers to architects and others a criterion for distinguishing the different periods in which trees are felled, provided such test may be relied on always to furnish definite and unvarying results. The observations hitherto made are too few to establish conclusively a theory on this point, and M. Prillieux therefore limits himself to inviting inquiries by timber merchants, and Forests officers who are in a position to make further trials with timber of different ages the period of the felling of which is positively known. It is only after repeated experiments under varying conditions that we shall be able to place this method beyond doubt.

E. De Dombal.

The Budget Estimate of the Forest Department for 1876-77.

Extract from the Proceedings of the Government of India in the Department of Revenue, Agriculture, and Commerce,—dated Simla, the 31st July 1876.

RESOLUTION.

It is matter for regret that the detailed orders on the Budget Estimates of the Forest Department for 1876-77 have, owing to exceptional and unavoidable circumstances, been issued at a much later date than usual. The form adopted in reviewing each Budget separately has again been maintained, in order that the several Local Governments and Administrations may be made acquainted with the grounds in detail upon which the local estimates have been modified.

2. A tabular statement is appended to this Resolution showing the figures proposed by the Local Governments and Administrations, and those which have been admitted by the Government of India. The statement, as well as the present review, relate only to the British Provinces under the Government of India, separate orders having been passed on the Forest Estimates of Mysore and Berar and on those of the Presidencies of Madras and Bombay.

3. The actual receipts and expenditure of 1874-75 which have already been reviewed separately are as follows :—

	Budget Estimate.	Regular Estimate.	Actuals.
	Rs.	Rs.	Rs.
Bengal	1,21,800	2,23,131	1,85,933
North-Western Provinces ...	11,50,000	10,69,907	10,85,947
Punjab	8,77,575	8,45,250	8,34,874
Oudh	3,18 200	3,18,200	2,77,411
Central Provinces	5,50,000	6,66,544	6,61,779
Burma	11,03,000	11,03,000	10,74,802
Coorg	1,00,300	88,300	58,012
Ajmere	3,000	500	203
Assam	1,33,200	55,200	
Surveys	.	...	64,749
Total Receipts ...	43,57,075	43,70,032	42,43,710

	Budget Estimate.	Regular Estimate.	Actuals.
	Rs.	Rs.	Rs.
Bengal	35,450	61,657	39,062
North-Western Provinces ...	7,88,415	7,58,980	7,16,878
Punjab	4,36,650	4,26,904	4,19,305
Oudh	1,91,900	1,57,000	1,58,161
Central Provinces	2,24,000	1,92,610	1,78,513
Burma	4,51,000	4,51,000	5,31,841
Coorg	41,200	34,100	23,773
Ajmere	20,772	26,550	17,753
Assam	29,800	29,320	31,138
Surveys	8,000	5,200	3,906
Total Charges for Conservancy and Working ...	22,27,187	21,43,321	21,20,330
Bengal	72,402	64,061	60,341
North-Western Provinces ...	1,56,429	1,50,005	1,38,997
Punjab	2,72,717	2,42,242	2,27,175
Oudh	50,200	50,000	46,666
Central Provinces	1,00,000	1,16,740	1,15,726
Burma	1,59,000	1,59,000	1,30,797
Coorg	12,740	12,740	14,226
Ajmere	17,990	9,210	8,813
Assam	41,848	37,815	28,385
Surveys	59,500	62,300	57,614
Total Charges for Establishments ...	9,42,826	9,04,113	8,28,740
GRAND TOTAL OF CHARGES ...	31,70,013	30,47,434	29,49,070
Surplus ...	11,87,062	13,22,598	12,94,640

4. The figures of the Regular Estimate of 1875-76, as compared with the Budget Estimates, are as follows :—

RECEIPTS.	Budget Estimate.	Regular Estimate.
	Rs.	Rs.
Bengal	1,99,000	2,38,000
North-Western Provinces ...	9,66,000	9,38,000
Punjab	7,85,000	7,95,000
Oudh	2,90,000	2,80,000
Central Provinces	6,73,000	7,15,000
British Burma	10,40,000	14,50,000
Coorg	84,000	76,500
Ajmere	2,000	500
Assam	85,000	1,10,000
Survey Branch	...	...
Total Receipts ...	41,24,000	46,03,000

CHARGES.	Budget Estimate.	Regular Estimate.
	Rs.	Rs.
Bengal	1,33,000	1,72,000
North-Western Provinces ...	6,36,000	5,40,000
Punjab	6,58,500	6,04,000
Oudh	1,72,000	1,83 000
Central Provinces	3,44,000	3,73,000
British Burma	7,18,000	9,50,000
Coorg	48,240	41,000
Ajmere	29,500	29,000
Assam	61,000	62,000
Survey Branch	67,500	67,000
Total Charges ...	28,67,740	30,21,000
Surplus ...	12,56,260	15,82,000

There seems good reason to expect a larger surplus in 1875-76 than what was realised in 1874-75.

5. The estimates of Receipts and Charges for 1876-77 proposed by Local Governments and Administrations and admitted by the Government of India, are as follows :—

RECEIPTS.	Proposed by Local Govts.	Admitted by Govt. of India.
	Rs.	Rs.
Bengal	2,39,000	2,40,000
North-Western Provinces ...	7,79,477	8,00,000
Punjab	7,42,870	7,45,000
Oudh	3,00,000	3,00,000
Central Provinces	6,50,000	7,00,000
British Burma	11,68,000	13,00,000
Coorg	75,800	66,500
Ajmere	1,600	500
Assam	1,10,170	1,10,000
Survey Branch	...	...
Total Receipts ...	40,66,917	42,62,000

CHARGES FOR CONSERVANCY AND WORKING.

	Rs.	Rs.
Bengal	97,000	97,000
North-Western Provinces ...	3,70,511	3,70,000
Punjab	3,66,891	3,67,000
Oudh	1,46,922	1,40,000
Central Provinces	1,94,000	1,94,000
British Burma	6,04,800	5,39,000
Coorg	26,500	23,500
Ajmere	18,512	12,000
Assam	42,493	42,000
Survey Branch	12,140	12,140
Total A Charges ...	18,79,769	17,96,640

CHARGES FOR ESTABLISHMENTS.

		Rs.	Rs.
Bengal	...	1,16,148	1,16,000
North-Western Provinces	...	1,52,880	1,50,000
Punjab	...	2,62,618	2,53,000
Oudh	...	53,078	52,000
Central Provinces ..	...	1,41,000	1,41,000
British Burma ...	...	2,07,900	2,08,000
Coorg	.	15,000	15,000
Ajmere	...	16,126	12,000
Assam	...	56,898	53,000
Survey Branch ...	...	55,360	55,360
Total B Charges	...	10,77,008	10,55,360
TOTAL EXPENDITURE	...	29,56,777	28,52,000
Surplus	...	11,10,140	14,10,000

6. The amounts which have been admitted, compared with the actuals of 1874-75, are as follows:—

			1874-75.	1876-77.
			Rs.	Rs.
Receipts ...	...	...	42,43,710	42,62,000
Charges A	...	...	21,20,330	17,96,640
Charges B	...	...	8,28,740	10,55,360
	Total	...	29,49,070	28,52,000
	Surplus	...	12,94,640	14,10,000

7. The estimated receipts are very nearly the same as the actuals realised in 1874-75, but the total charges are less by one lakh of rupees, which consequently increases the estimated surplus by that amount.

8. The working charges are Rs. 3,23,690 less than the actuals of 1874-75. In that year Rs. 18,37,894 were expended for the production of revenue, and Rs. 2,82,436 for the organisation and improvement of the forests. For 1876-77 the proportion is estimated at Rs. 13,75,400 for the production of revenue, and Rs. 4,21,240 for the organisation and improvement of the forests. It is satisfactory that it is intended to devote a larger proportion of the expenditure to increase the productive powers and the capital value of the Government forests.

9. The estimated establishment charges are considerably higher than the actuals of 1874-75: thus—

	1874-75. Rs	1876-77. Rs.	Increase. Rs.
Salaries ...	6,61,994	8.63 640	2,01,646
Travelling allowances	1,23,434	1,42,800	19,366
Contingencies ...	43,312	48,920	5,608
Total ...	8,28,740	10,55,360	2,26,620

10. The largest increase is in Bengal (Rs. 56,000), and Burma (Rs. 77,000). A considerable increase is also estimated in Assam (Rs. 25,000). In these three Provinces the demarcation of the reserves is in progress, and the strength of the superior and subordinate staff must therefore necessarily be increased. In Burma moreover the work has considerably augmented since the permit system was abolished in the greater portion of the more valuable forests. In the Central Provinces an addition of Rs. 25,000 is estimated, mainly with the view of increasing the subordinate establishments of rangers, foresters, and forest guards, and giving them better prospects of promotion—a measure which has become necessary by the progress made in the improvement and working of the reserves. In the Punjab an increase of Rs. 26,000, and in the North-Western Provinces of Rs. 11,000, is estimated under establishment charges.

11. The actuals of 1874-75 under this head, placed side by side with those of 1873-74, stand as follows:—

	1873-74. Rs.	1874-75. Rs.
Salaries	6,70.842	6,61,994
Travelling allowances ...	1,30,340	1,23,434
Contingencies	44,938	43,312
Total ...	8,46,120	8,28,740

12. There was thus no considerable increase in 1874-75, and it is hoped that the actuals of 1876-77 will show a less increase over those of 1874-75 than has been admitted in the estimates. The Governor-General in Council desires to urge upon all Local Governments and Administrations the necessity of closely watching over the expenditure on establishments in the Forest Department with the view of keeping down those charges at as low a figure as possible.

II. Reviews.

Report of the Proceedings of the Forest Conference of 1875.

Edited by D. Brandis, F.R.S. and A. Smythies, B.A.

The first thing that strikes us about the report is its form. Attention to such matters adds no little to the comfort of readers, and the comfort of readers adds no little to their appreciation of the subject presented to them. The report on the conference of 1873 was published in a convenient octavo size, and it was to be hoped that this would serve as an examplar of a uniform set of volumes to be brought out as each succeeding conference was held and reported. Why the inconvenient official foolscap size (suitable enough for office records) was adopted in a book intended for professional and general circulation, it is not easy to understand.

This conference (1875) is the second *general* conference held in India, and as that of 1873 was to some extent tentative, and the season (which circumstances, not choice determined) was inconvenient, it was not nearly so well represented by delegates from various localities and spheres of work, as that of 1875.

The conferring body was represented in the following proportions by members present:—

	(Forest service)	(Other services.)	
Government of India ...	3	7	
Ditto Madras ...	1	1	
Ditto Bombay ...	6	1	
Ditto Bengal ...	2	0	
Ditto Punjab ...	5	6	
Ditto N-W. Provinces.	7	0	
Ditto Oudh ...	1	0	
Ditto Assam ..	1	0	
Ditto C. Provinces ...	6	0	
Ditto Mysore ...	1	0	
Ditto Ajmir ...	1	1	
Ditto Berar ...	1	0	
Ditto Bahawalpúr ...	1	0	
Total ...	35	16	51

Six officers (including one from the otherwise unrepresented province of Burma) contributed papers to be read, but were unable to attend personally.

To review to any purpose the report of a conference, which embodies the series of essays read, and remarks made thereon, is not an easy task: criticism cannot be directed to each subject or portion of a subject in detail, for that would be for the reviewer to have an extra word on each subject out of conference, and thus to "fight the battle o'er again, and twice to slay the slain."

We must rather direct ourselves to the manner of treating the different subjects, as this may be expected to strike the outside observer who is interested in Forest matters.

The conference was opened by Mr. DIETRICH BRANDIS, the President, with a brief and appropriate address, in which he alluded to the Forest service of other countries and their relations to that of India.

The more this "*entente cordiale*" is felt the better; especially for us who need much encouragement and with whom so much has to be learnt and so much still be done.

We cannot but regret that no resolutions were passed at the conference, and that the President threw, or rather gently aspersed, cold water on the practice. To us it seems that a well-considered resolution may be in some cases a practical and satisfactory way of gathering together the threads of discussion, and summarizing the opinion of the members. It also enables action to be taken at any future time. It is indeed possible that Governments do not like having a course of action recommended by a resolution which it is not easy to divest of weight and significance, and which, though worded with that caution and respect which no member of a conference would permit himself to forget, may nevertheless verge on an exposé of a mistaken policy. On the other hand no authority that is guided by reason, and not merely by the "*sic volo sic jube*," should ever fear criticism even formulated and recorded. As no one recommended anything, the resolution regarding the conference which we suppose the Government of India will think it proper to issue, cannot contain anything but generalities, hence

we regret the less that at the time of our review the document has not been published.

The first paper read by the president, on the *Aim and Object of Forestry in India,* does not appear ; it is relegated to the pages of the INDIAN FORESTER. Here we may remark on the frequency with which papers are thus disposed of, and the apparent want of any principle on which this is done.

It is natural to suppose that a vivid and peculiarly interesting discussion would have ensued on the subject ; to find it passed over without a word from any one is, to say the least of it, remarkable. The same may be said of the discussion on Forest terminology.

That Dr. WARTH'S valuable memoir on Impregnation of Timber, fitted rather for study, than for an extemporized discussion, should be printed separately, is in every way suitable ; but we cannot understand why the essay on *Opuntia Dillenii* (excellent as it is) should be admitted, and Mr. Brandis' paper omitted.

In the same way the excellent abstract of Jules Clave's paper, contributed by Col. Pearson, (if so highly important and intensely interesting a subject, must be put aside to give place to steam saw mills and prickly-pears)—ought rather to have been printed in the FORESTER for study than put in an Appendix to the present report. We shall have to say a little more about this paper presently.

The papers on *Fire Conservancy* take a prominent place, as they well deserve; the desirability of the extension of fire protection, and the necessity of doing this at a cost proportioned to the value of produce and other public interests involved, excuses the multiplicity of details and figures ; it is very valuable to see not only what measures are effectual, but what such effectual measures cost in each province. The steady progress made, both in effect and in economy, is gratifying. The discussion seems to have been lively ; though the varieties of experience regarding evergreen protection belts might have been more developed. The very important consideration of the action of the civil authorities in striking at the origin of fires appears to have been left out altogether, Mr. Greig's

very pertinent allusion to this important subject, apparently falling flat. We are glad to observe a tone of vigorous and real conviction on the subject pervading the debate, and taking the place of the old style of "considering whether, at some future time, it might not perhaps be desirable to attempt experimentally a partial and very gradual protection, &c., &c."

The remarks of MR. DRYSDALE on the Mailghát works of 1874 and 75 are particularly interesting.*

We would commend to further study the advantages of conservancy noted under heads *(b)*† and *(c)*‡ of his paper page 21. The former is of great interest to foresters and we should like to know whether the sources of the rivers and their feeders are situated within the preserved area, or whether a portion merely of their course is covered with forest? Climatic facts of this sort are of the highest importance, deserving accurate and full description and record.

Mr. Drysdale has, fairly enough, chronicled the disadvantages that are to be set off against the good done; but some evil must be expected: there is perhaps no unmixed good in the world: and the first of these two disadvantages will certainly become less as the forest grows in stature, and there is more thinning out and less rank growth under the shade of the complete leaf-cover.

The conclusions regarding the collection of "mohwa" flowers were valuable, but the discussion regarding cutting grass *versus* burning, was feeble, no notice being taken of the different species of grass which are produced at different elevations. MAJOR WATERFIELD evidently wished to burn the forest for the sake of the grass, as he ingeniously suggested that, when pine leaves fell and covered the ground, firing was necessary (*i.e.*, under the pine trees!). Mr. Brandis asked whether it was necessary to burn grass in the plains? It may be noted that the practice can nowhere correctly said to be *necessary*.

Under the head of *Forest Rights and Privileges*, Mr. HORS-

---

* P 21 (paras. 10 and 11.)

† New (*b*) relates to the supply of water in nullahs and pools.

‡ (*c*) to the cessation of floods in certain rivers.

LEY read an interesting paper on the Bheels in the Khandesh-Sátpurá hills. We commend the new term "dearborization" to terminologists, but are hardly prepared to think that the conclusions regarding the value and utility of forest like that of the Pal Tappa (page 24, Report) are correct.

The idea of utilizing such wild tribes by making foresters and forest laborers of them, is one deserving great attention. The same note was also struck by Mr. NARAYAN BULAL OKE, and a somewhat similar ground taken, in connection with the employment of village officials of hereditary local influence, by Mr. NARAYAN ANANT OKEDWAY, whose paper, or so much of it bearing on the subject, might have been here appropriately introduced.

A paper more directly on *Forest rights* was then read by MR. AMERY; on this we cannot congratulate the author; the failure of the paper is perhaps owing to the form; during the reading it must have been singularly difficult to catch the author's thoughts, still more so to follow the chain of his argument continuously.

It is no use going into the origin of rights and property, unless one is prepared to do so from the stand-point of sufficient acquaintance with jurisprudence.

To the more intellectual forester a theoretical study of the origin of right and property would be interesting; but to the ordinary every-day worker it is important only to consider things as they are, and to draw any distinction between one class and another, which practically exists, and can be seized on to aid in controlling obnoxious practices in the forest.

Mr. Amery's paper does neither one nor the other; but trying to go through with both, as a necessary consequence fails.

The discussion which followed had not much to do with Mr. Amery's paper, and was of itself of no great interest. It clearly wanted some definite propositions to start from.

Mr. Amery probably meant what is in itself true and important, but he did not say it well. We cannot in all cases trace the origin of rights (as the President observed), but we can tell this much for certain, that by the far the greater part of what are called rights in India are rights inherently limited

by a certain power of control.* We have one practical question to ask (leaving the precise nature of the right, or the propriety of calling it a right at all, to the curious) and that is,—has Government all along asserted or exercised its power to regulate or control (to ever so slight a degree) the exercise of the user (call it a right or whatever else you please)?

However obscure the origin of the user, this at least can be ascertained; and we have *to insist on the controlling power of the State whereon it can be traced;* and to maintain a clear distinction between cases where the most extensive and universal user is subject to such control, and those cases now the Government has cut itself off for interference by its own action or declaration.

If you choose to call the user a *privilege* in the former case, and a *right* in the latter, do so without quarrelling about terms; but do not lose the distinction on which your power of conserving the forest practically depends.

The rights recorded in settlement records and district grants are almost the only rights which are really beyond the reach of *some degree of* interference in the interests of the public welfare.

The whole theory of the *Jaunsar Forest Settlement* (MR. BAGSHAWE'S paper) depends on the right of Government to control the forest user in this way, otherwise how could a "portion of the second class be ultimately included in the reserves" (p. 34)?

In the midst of this discussion, an allusion to communal forests made (or reported) a little out of place met with no responsive development. Assuming a right on the part of the people, or a practical expediency, which determines Government not to interfere with them, must you give up the area affected to the people *to destroy*, or is it enough to give them *all the produce and income* to enjoy, managing the forests yourself to ensure its protection in the public interest? This, as

* Does Mr. Amery mean by "inalienable rights," rights that cannot be transferred (that is the literal meaning of his term), or rights that cannot be got rid off or extinguished?

the theory of village or communal forests, we should like to have seen more fully debated and summed up in a resolution. The whole authority of the conference ought to have endorsed MR. BRANDIS' observation "that communal forests * * * must be looked upon as permanent sources for the supply of forest produce. They must be as strictly demarcated as the State forests, and they must not be converted into permanent fields."

MR. SHUTTLEWORTH'S communication on page 36 ought also to be laid to heart by authorities who are fond of appraising "happy and contented populations" against "flourishing forests."

The papers forming a combined series on all the *Ajmír and Mhairwará forests* by MAJOR REPTON, MR. LESLIE SAUNDERS, and MR. MOIR, commenced with a historical sketch of tenures, proceeded to a narrative of the attempts to reserve land for forest purposes, and ended with an account of the success attained in natural restoration, and in artificial or aided reboisement. They are complete and satisfactory. Although (at page 46) a series of practical conclusions was drawn by MR. MOIR, which invited discussion, it is to be regretted that nothing more was elicited (or reported) than the somewhat bald remarks given at page 48. MR. BRANDIS gave a short additional resumé derived from his own experience, which is further enlarged in the Appendix. MR. WALLINGER started the subject of broadcast sowing in stony places; but with one or two brief remarks the whole of this vitally important subject was shelved.

A paper on *District Arboriculture* was next read by MR. W. COLDSTREAM, C.S.: it was eminently to the purpose, and was just what a paper read before a conference ought to be,—calculated to elicit a discussion, and presenting an outline to be filled in by the varied experience of the large body of delegates from different parts of India.

The papers deserve attentive perusal, and especially noteworthy are the suggestions for making the most of what little rain water there is in arid districts, the remarks about fencing, and the economy of irrigation effected by burying near the root of the young transplant a very porous "gharra," which can be peri-

odically filled with water, and will slowly impart its moisture to the soil around the roots.

Perhaps the best of all the papers read at the conference was that which next follows by MR. FERNANDEZ on *Teak Coppice* in the Central Provinces. It shews how much can be done by accurate and careful experiments fully and systematically recorded. These remarks ought to be of great practical use in the management of the teak forests of the Central Provinces, where the tree reaches its northern natural limit. The conclusions drawn are unfavourable to the treatment of these forests on the system of coppice under standards; and DR. SCHLICH, without however inviting discussion, expressed a strong opinion against this system generally. It was indeed desirable that so important a subject should not be discussed without having been specially notified beforehand.

MR. FERNANDEZ insisted much on the method of shaping the stools after felling, but it may be doubted whether the form of the second figure (p. 64) would be attained without the aid of a carpenter, and at considerable expense.

The remarks made on this subject suggest to us the great practical advantage that would result at the next conference, if the members would bring with them and exhibit the different forms of axes and similar tools used in their localities for forest work. The heavy "dah" or forest knife as used by the Karens in Burma may be instanced as a weapon deserving attention.

MR. GREIG next read a paper on the *kham tehsil system* of collecting dues on produce exported by purchasers from the forest. Excellent as the system appears to be, for the effective realization of revenue, it evoked considerable discussion as to whether it secured the regeneration of the forest, and the limiting of the exploitation to the real normal yield?

Where there are certain safeguards in the existing circumstances of the forest, as was stated to be the case in the N.-W. Provinces, the object of preservation can, it seems, be sufficiently provided for.

It is also desirable in many cases to levy toll on produce, over the taking of which there is otherwise no kind of control, as in Chittagong. Take a toll, and you not only get something in

return for the loss of the forest, but some kind of check is put on the extraction, as people are always a little more careful with material that they know they will have to pay for, than with that which costs them nothing.

Next followed papers on *Steam Saw Machinery* by CAPT. CAMPBELL WALKER and MR. R. THOMPSON; they did not elicit any great amount of discussion as to the form and character of the machinery and its parts, but chiefly as to how far steam machinery was superior to hand labor. DR. SCHLICH also rejoiced in this point being taken into consideration, as preventing steam saw mills becoming a hobby of the Forest Department.

The use of inexpensive water-worked saw machinery, such as one sees so commonly in Switzerland, was not noticed.

MR. FERNANDEZ alluded to a new American invention which replaced the saw blade by a platinum wire raised to white-heat by an electric current. The consequent charring of the surface of the wood is so very slight as to be absolutely immaterial.

In the next paper was made what we must call a faint attempt to introduce the subject of the *Forest lands of the Simla Municipality*, within whose bounds the conference met.

The paper and the very trifling discussion on it, are alike without interest.

CAPT. BAILEY'S paper on *Forest maps* might perhaps have been more condensed, and would have been more easily remembered and discussed had there been less local detail, and the paper confined to the results of a study of different offices conbined into conclusions directly affecting the work of the Forest Survey Office in India. It is to be borne in mind however that in reading the paper the subject was at once enlivened and greatly elucidated by the actual exhibition of the specimen maps obtained from the different countries, and described in the text.

The discussion, as reported, is extremely poor and uninteresting. In fact, no one seems to have expressed any opinion whatever. CAPTAIN BAILEY had very properly cut up the general part of his remarks into a series of headings, so that each might present a separate point for consideration; but no one had anything to argue as to the scale of maps, as to the amount of topographical

detail, the advisability of sketching in the contour of the country, or the method of shewing the features of forest growth.

A paper then followed on the forests of the undulating *plains of Mysore.*

The picture is not a pleasing one, and CAPTAIN VAN SOMEREN did well to bring the subject forcibly to notice. We cordially recommend the Mysore Revenue Department (whatever that may be) to mend its ways regarding the Mirlwadi jungles, having destroyed which (in return for a toll of 6 annas *per cart-load* of fuel!) it is kind enough to ask the Conservator to open *his* jungles to a similar destruction, and for a similar reward (?)

Next we have a valuable memoir on the *Madras plantations and reserves* by CAPTAIN CAMPBELL WALKER. In editing, this very long paper might have been condensed to nearly one-half, to the great benefit of bringing out clearly and prominently the facts. These, while they vindicate the Madras Government to some extent, at the same time shew how very little has been done for the whole presidency in the way of reserving natural forests.

There are 3,386 acres of timber plantation, of which 2,348 belong to the fine Nelambúr teak plantation, 158 acres to sandalwood (costing Rs. 200 per acre), 85 acres to teak in S. Kanara (about Rs. 85 per acre), and 80 acres to teak near Mudumallay (costing Rs. 250 an acre.)

926 acres of highy successful Australian trees, with admirable financial results, cause us to wonder why so small an area of the work has been undertaken, and that too distributed over 19 little plots or gardens; and why there cannot be a large and highly successful extension of the work.

Of plantations chiefly intended for fuel, there are only 2,343 acres; 742 in Cuddapah, 330 in Bellary (given over to district authorities), 878 in N. Arcot, and 373 in Trinchinopoly. The N. Arcot plantation stated afterwards to be 984 acres (unless indeed a different plantation is meant which is not clear) is of *Casuarina* and gives successful results.

An interesting account of the *Pterocar pussantalinus* (red sanders of commerce) at Codúr (Cuddapah district) concludes this part of the paper.

The second portion is on Firewood reserves, but the reserves appear to include some timber forest also. The total of the reserves is given as—

Acres.	
41,586¼	stocked (whatever that may be.)
55,888	half stocked.
3,728	blank.
Total...101,202¼	

CAPTAIN WALKER is quite alive to the necessity of surveying the forests and arriving by valuation at the yield per acre, in lieu of the very vague phrases "stocked" and "half stocked." The most satisfactory feature in the history of the reserves seems to be the acquisition (free apparently of all rights and privileges) of 4,000 acres of good forest at Walliar for Rs. 10 an acre.

A large proportion of the other reserve, be it recollected, is only what in India generally, is called unreserved or open forest.

The paper concludes with a laudation of the Madras Government—which, while heartily commending the good done by CAPTAIN CAMPBELL WALKER himself and by intelligent men like MR. YARDE, MR. STANBOROUGH, and MR. HUDFIELD, we cannot endorse from a forest point of view.

They are behind every other Government in India in reserving forests (and many of these are not over-zealous in the matter), the area just described being quite insignificant for the whole of the Madras presidency, including as it does many ranges of hills where forests must have a vastly important climatic effect; the forest finances are in a wretched condition, and the arrangements of the staff in relation to the district authorities bad.

We have only to note with regard to the table at the end of the paper that the *cubical contents* of the trees on Nelambúr appear to be taken out on some erroneous principle; it looks as if the compiler had taken the square of the quarter girth (recorded at 6 feet), and multiplied it by an average of the height of the trees! In cases like this it should always be stated not

only what the height of the *tree* is; but what height is taken as the limit of the trunk or timber-yielding portion, the rest being only crown, and possibly unsaleable (as firewood or small timber.) Has the Deputy Conservator calculated the form-factor or fractional co-efficient by the aid of which he has to reduce the contents of the ideal cylinder (calculated on height and radius of the tree,) to the contents of the actual cylinder, *i.e.*, the figure approaching an elongate cone, which the trunk really shows; wider at the base, and diminishing towards the crown? This will vastly affect the value calculated at 12 annas per foot.

Some discussion followed the reading of the paper on the yield of plantations which in the case of *Casuarina* in S. Arcot was stated to be 410 cubic feet per acre. The term "fuel plantations" for the works in the Punjab and elsewhere was objected to.*

A paper on *Preliminary working plans* by DR. SCHLICH was next read. No more important subject could have been discussed; and this is eminently one of those matters where the heads of the subject should be communicated, specially to various officers long before the date of the conference, in order that they may be fully prepared to discuss the subject when the time comes, and thus the conference might be in a position to recommend for *practical* adoption in the provinces, something like a uniform system. To sum up a debate of this kind, a formal resolution is very much wanted.†

We cannot sufficiently express the disappointment we felt at observing in the report that it "was not found practicable" to reproduce the "animated and protracted discussion" which appears to have distinguished this paper. The reporting agency is hardly up to the mark, if while it is able to reproduce gracious observations that Mr. So-and-So's paper is "*very* interesting," or Mr. So-and-So's remark "*very* important," it is unable to tell us (even from memory aided by enquiry while the officers were still on the spot) what different officers said or urged on a subject on which the whole future of our forests

* Mr. Baden-Powell has informed us that the term fuel plantation was officially abandoned in the Punjab as far back as 1871.

† Resolutions on the different points were agreed upon by the conference, but they have been omitted from the report together with the discussion.—THE EDITOR.

depends. This is playing Hamlet without the Prince, with a vengeance.

The distinguishing features of the proposal are first to acknowledge the preliminary nature of the work; next to fix the duration of the plan at 10 years, subject to a revision at the end of five. The blocks are to be natural divisions of the forest. The compartments to be manageable, and as small as the value and expected revenue of the forest will allow. They are to be considered as the unit of working and convenience in that respect is placed before considerations of difference of growth, soil, &c. The stock is to be ascertained by linear sample areas—if possible, running from end to end of the compartment,—of 100 feet wide; the area surveyed should never be less than 2 per cent. of the total area. Trees to be classified according to the familiar size classes, girth being taken at 4 feet from the ground.

It is urged that a rough and general method must be taken for determining first the annual yield, and secondly the compartments to be worked. Assuming that 6 feet girth, or first class size, is fixed for felling, take (S) the total number of 6 feet trees, and (A) the number of years required to let an equal number of younger trees attain 6 feet, then the maximum annual yield $Y=\frac{S}{A}$.

For the justification of this method, Dr. Schlich's paper must be consulted.

A long paper on the *Prickly Pear* was read by Mr. Wallinger, which, though of very considerable interest, would have been better as an article in the Forester than as a paper for discussion.

Mr. Ferrars has fared ill at this conference, while Mr. Brandis is consigned to the Forester, and Colonel Pearson to the "Appendix." Mr. Ferrars' papers were only "submitted for perusal." What they might have contained, we do not know. Something very naughty, perhaps. We hope Mr. Ferrars will tell us afterwards in the Forester, only that he will try and write more simply and plainly what he means. When Mr. Ferrars wishes to have "an Indian-authoritative-State acknowledgment of the broad principles of action on

which scientific forest measures, from the greatest to the least, claim to have their merits tested," he will give many readers the impression that he desires to have a sort of Forest Magna Charta, framed and glazed and hung up by every forester over his mantle-piece. It is rather like an Engineer wanting an authoritative declaration that Government believes in the parallelogram of forces or the forty-seventh proposition of Euclid's 1st Book. The fact is that we have *already* plenty of authoritative utterances about not trenching on our capital, strictly reserving forests for future generations, improving the Crown estates, &c. What we want is that all Governments should pursue a definite policy, that they should sanction works and expenditure with a fixed and constant aim. Unfortunately they let one Conservator upset the plans of another and often forget what policy is to be pursued, if the pressure of conservancy produces the least outcry from "the people," or whenever one of the usual financial crises sets the Revenue Department asking for a larger surplus.

For the rest, no one ever was or will be ordered to deliver so many thousand tons of timber, when he is in a position to reply that so much cannot be yielded, or points out in a quiet business-like way that certain forests must only be very cautiously worked until it is known what the forest really *can* yield.

We have not met with the people whom Mr. Ferrars fights with in vision, as denying the existence of forest science, or questioning that the normal annual yield *is* the criterion of outturn.

From the rather exalted style of the last note, the conference came down to a series of papers about making paper from bamboos. The stems should be grown in a sort of coppice, *young* shoots being required for the manufacture. Nobody had anything to say on the subject however, and we should like to know as the most practical matter what it would cost to get to a port bamboos in the form required for each of the chief bamboo districts of India, and which are *primâ facie* so situated as to be able to undertake the supply,—Assam, Arrakan, and so forth.

The report closes with a brief letter and its reply, concerning growing teak in Japan. Why this was read or recorded, as the

question was of course answered in the negative, and there was no scope for either discussion or suggestion, it is not easy to divine.

The *Appendix* to the report contains Colonel Pearson's abstract of M. Jules Clavé's paper on the climatic effect of forests. This paper was passed over for want of time. We hope it will be attentively read nevertheless, so that at some future conference we may be able to come to some distinct understanding about protective forests in India. We seem to be swallowed up in congratulation that we have got a supply for this railway or that town, and that we have secured a fraction per cent. of the total area of natural forest in a few places as reserved forests; few trouble themselves to ask what will become of all the places where the reservation has *not* gone, supposing all this to be true (as it most undoubtedly *is*) about climate and soil, and streams and torrents and rainfall?

Is not the Forest Department, we might also ask in connection with the subject, in a position to register rainfall inside and outside of forests, and so continue the observations noted in the paper? The Conservator of the Punjab has a great plantation covering some 12 square miles; why does he not establish rainguages in the midst of the plantation and outside, also one above the trees, and one below to make observations like those of Mathieu Fautrat and Cautegril?

Some practical observations may be made in conclusion.

First, why this report should appear eleven months after the conference, it is impossible to say: most of it consists of written papers, which could have been in the printer's hands at once, especially as in *no case* is the progress of the essay interrupted for the insertion of remarks made in the course of reading.

Considering the amount of matter recorded as the remarks and replies of the different members of conference, a month's delay would have been ample.

But it must really be seen to that at future conferences the discussions are better reported. The Government has recognized that it is worth while to incur the limited expense of allowing officers to assemble; why is it not worth while also

to pay one or two short-hand writers? Otherwise, the great benefits of a conference are limited to the people who attend it.

In the conference of 1873, if we recollect right, besides three or four members taking notes of what went on, people who made remarks were requested to jot down on a slip of paper (marked with the number of the subject), the substance of what they said. This was imperfect, but it was better than nothing, and the debate was reported or written out almost *immediately*, so that the subject was fresh in the memory of the reporters, and in some cases even the officers concerned could be asked to correct the report of what they said.

Then as to the conferences themselves, it ought to be settled *at least* 12 *months before-hand* what subjects shall be brought up at the next conference. Every one should be at liberty to propose a subject, and it might be vested in a "conference committee" consisting of say the Inspector-General, one Conservator, and one controlling officer, to decide what subjects should be selected. It should be arranged next that specified officers should be invited to deal with these subjects, and that in all cases of special importance, the heads of the essay he prepares, should be circulated to as many officers as possible, with a request to them to consider and be *prepared to discuss* the subject.

Any officer may give notice of his intention to bring any subject before the conference, *besides* those previously announced, but the announced subjects would have the priority of time at the conference.

All papers to be read at conference should be legibly written on *one* side of the paper only.

As to the style of papers, a concluding observation may be offered. It is said that poetry intended to be set to music and sung, must, in addition to other qualities, be free from intricacies of idea and involved expression, and be such that the poet's style can be seized in the brief duration of each musical phrase.

In the same way a conference paper must be eminently simply written, so that its purpose can be seized and comprehended at once during the reading. A paper that requires

to be read over twice or thrice before its meaning can be got at, however valuable that meaning may be, is absolutely unsuited for a conference. The subject must also be divided under heads, and in fact so cut up for mental digestion as to present a series of points for successive consideration. If there is no break in it, and no one can say a word till the whole paper is done, it will happen, save in very exceptional cases, that the discussion will be pointless, or miss the salient questions involved, owing to the difficulty of knowing where to begin, or keeping before the mind the whole plan and outline of the paper.

That the conference of 1875 was far better than its report, seems from all accounts certain: that the time and money spent in bringing together the large staff of officers into friendly communication, was well spent, there cannot be a doubt. Besides the actual conference meetings more than one committee met and disposed of highly important matters connected with audit of accounts and organization of business. We only hope that before many years pass, another conference may assemble, and as each one finds us with increased experience, as well as improved in our organization for ensuring useful discussion, and for reporting it well, so each report may be of increasing interest and increasing worthiness to take a permanent place on the bookshelves of practical Forest Science.

Report on the Gums, Resins, &c.

In the Indian Museum, produced in India (under the direction of the Reporter on the Products in India) by Dr. M. C. Cooke, 1876.

By B. H. Baden-Powell, F.R.S.E.

It is to be hoped that this useful report or catalogue *raisonné* of the gums, resins, &c., produced in India, will be available for study by all those Forest officers who take an interest in scientific but practically useful subjects. The mistake is often made of expecting Forest officers, burdened as they are with work of their own, to undertake to investigate and report on

the whole of an extensive subject; the report is called for, and reminders are sent probably within a mouth or so, and the consequence is that nothing is elicited.

But, with a report like this before them, it will be easy gradually to collect specimens and information. If every Forest officer would only take up *one* individual gum or resin which is doubtfully given in the report, and give his own actual observation, a correct nomenclature, the true habitat and (in cases where he is not certain of the tree) a good dried specimen, in a short time most of the doubtful points in such a report would be elucidated.

I may here mention that lac does not form one of the products included in the report, but that authentic specimens of the lac in its natural state on different trees (with botanical specimens, where the species is not known for certain), and specimens of the insect in all its stages, are desiderata at the Indian Museum and also at Lahore. Will no Forest officer of the Central Provinces respond to the want?

But to the Report. The first thing that strikes one is the want of a table showing abbreviations used for provinces, &c. What do *Duh*, and *New*, and *Parb* mean? "Tam" is presumably for Tamil, "Dek" for Dekhan, and "P." for Persian; "Punjabi" is ignored.

Next the vernacular spelling is (as regards the names in languages with which we Northerners are familiar) a perfect hash. Very often also different varieties of barbarous spelling are given as if they were "synonyms."

Now, as regards the languages, Arabic, Persian, Hindi, Urdu, Punjabi, Pashtú, Bengáli, and Sanskrit, the only natural system is to use consonants as in English. The diacritical points are too elaborate for common use, though of course their adoption would be a benefit. It is practically enough however to distinguish the nasal "n" by a dot, thus ṅ; and the *'ain*, by an apostrophe; the guttural "gh" and "kh" by a line drawn under, thus g̲h̲, k̲h̲.

In vowels the continental sound is given.

The short vowels a, i, u, are always sounded like the "a" in organ, the "i" in will, and the "u" in put.

The long vowels á, í, ú, to be always distinguished by an accent, have the sound of p*a*ss, sw*ee*t, p*oo*l.

The "y" is used *only* as a consonant; as in the word níyat (nee-yat); combinations therefore intended to represent vowel sounds, as "ay," "ey," "oy" are inadmissible.

The "e" is always as *é* in French, "ai" is always as the in "price," "au" as *ow* in "now." No such combinations of vowel sounds, as "ou," "ow" should ever be used.

I do not of course offer these remarks as regards Telugu, Tamil, Kanarese, or Cingalese, of which I know nothing. For Burmese, the *vowel* sounds are more numerous, and will require some further device, *e.g.*, the words hle, hlé, hlă, and hlá, mean "boat," "cart," "beautiful," and "city," and require nice discrimination.

Some instances (merely by way of example) may be given out of the report.

Samaghe-arabbi	...	*for*	Simagh-i-'arabí	(p. 3).
Kheir Khuera, &c.	...	„	Khair, Khairá	„ 5).
Ran-sirrus	...	„	Ban-siras	„ 6).
Lall-kheir	...	„	Lál-khair (red khair)	„ 7).
Bael	...	„	Bel	„ 8).

The names of *Armeniaca vulgaris* (p. 9) are unintelligible for want of accentuation. In the plains of North India jaldárú (which is a corruption of zard-árú, *lit:* the "yellow peach"), barzhá (Pashtu), chír, hárí or sárí (Hills generally). Chúí is an *apple* in Chamba.

Azadirachta should be ním (Persian form), and nímb (the Hindi form) (p. 9).

Jamoon *for* jáman (N. India,) jamú (H.), p. 10.

Careya arborea.—The Burmese name bam-bhú-wé only "bam-bonay" does not exist (?) The *Bengalee* name "ban-bham-booai" is, I believe, nonsense, being a jumble of Hindi and Burmese (p. 12).

Citrus, sp.—The names are much confused: nímbú or límú is the generic Urdu name, and does not indicate different species of lime. The latter are distinguished by "míthá" and "khattá" for sweet, sour, &c.

Emblica officinalis.—Amla or áṅwlá are the two forms of all the dialects.

Melia azadirach.—The name is bakain. This species and *M. sempervirens* are used confusedly for the same tree in Indian books. It is now settled to use *M. indica* for ním, and *M. azedarach* for bukain or drek (p 20).

Fool ... *for* phúl ... (p. 20).

Prosopis spicigera.—The common N. Indian (Punjab) name is "jhand."

Ara-bukhára *for* álú-bukhárá (p. 23.)

Anar *for* anár darim *for* dárim.

Gulnar *for* gul-ánár is the "flower" of pomegranate, not the tree or its gum (p. 23).

Semecarpus.—Beládar is Arctic, and bhiláwáṅ bhiláma in all Hindi dialects; various spellings given (p. 24).

Tamarindus.—Imlí or amlí in Hindi dialects, thamr-i-hind (Persian) (this "th" is pronounced in India like s). Amblie is not an Arabic word as stated.

Tamarix.—Pilchí, jhau, farásh; are names not given. The now-settled species are *T. gallica* (L.), pilchí, leí; *T. dioica* (Roxb)., pilchí and kachleí (a mere shrub which does not give a gum), *T. articulata* (Vahl.), the farás (H.), farwá or úkhán (Pji.) This latter is the biggest and the one that yields gum.

Terminalia.—Bahera (Hindi), balela (Persian), spelt "beley-lep" (p. 26).

Wrightea.—Dúdhí (W.) is *W. mollissima* (p. 28).

W. antidysenterica is indarjau or indarlatíb.

Gossypium is katírá or katírá Hindi (p. 30). The Arabic or Persian would be simagh-qutn-i-hind, not "qutade" as given.

Pterocarpus.—Dammul akhvaine *for* dam-ul-akhwain, khune sugavashane *for* khún-síyáwashán (p. 36).

Mucherus *for* Mochras (p. 40).

Ausarake revan *for* 'usára-rewand (Persian`, (p. 43 and p. 46.)

Ush-shaq *for* ushaq (p. 37.)

Barazd *for* barzad (p. 60), and rhulyan *for* kalbán, and metonioon *for* mítúbiún; perhaps these mistakes are Royle's, somebody having misread the "be" and "ye" and "nún," all of which differ only in the points (*id*). A similar mistake occurs

at p. 112, where whatever the extraordinary word aqovo yala samun may be, the latter member of it is balásamún.

Sugbeenuj *for* sak bínaj, and kundel *for* kundal (p. 63).

Aflatan *for* aflatún, and bui tahadan *for* bú-i-jahúdán (p. 72).

Eng-gyín (eng-gyeen) which in Burma is *Pentacme siamensis* (Kurz), not *Shorea robusta*, and the-yá enggyín is *Sh. obtusa*.

The Arabic and Persian names are unintelligible (p. 90).

Trachylobium.—The common name "sundras" not given (p. 98) save as "sandarus" in a quotation: Arabic is sandarūs.

Uluk baghdani *for* Alk Bághdádí (twice) (p. 105.)

Balsamondeandron.—The Arabic is unintelligible. Persian should be raughan-i-balsán (p. 112).

Gorjon tail *for* gurjan-tel (H. and B.) (p. 113.)

The Burmese is kanyín-tsí, or oil of kanyén.

Melanorrhœa, in Burmese thitsi, "wood-oil or varnish;" the other names are probably mis-spellings (p. 120).

Pinus longifolia should be gandah-biroza-ká-tel, or simply gandah-biroza.* The Dekhan corruption is firoza. Persian is raughan-i-ratiánaj.

Kuel *for* kail (p. 124).

Abies Smithiana.—The names are rau or khatrau varied locally into kundrau and kudrau, &c. (p. 127).

Tectona grandis.—Sígun is the word given by Shakespeare for teak, called also in Bombay, and elsewhere, sagwán or sagon. Our word teak comes from the South Indian name (teka, &c.,) in Burmese it is kyún: this is omitted (p. 129).

These are only a small number of cases taken at a casual glance. I have not the means at hand of correcting the Arabic and Persian names; they are nearly always wrongly spelt. Under A. Arabica I notice that "kíkar," which is the common *North* Indian name, is referred to *duh* (whatever that may mean). Linguists will be interested to notice how the more Southern or (Hindi proper) name, bábul is derived from the Sanskrit "barbura," and passes into bábul (Hindi and Bengali); the latter given as babuler (?) into "báblí" of the Mahrattas, and "bávlí" of the softer Gúzarátí.

* J. and Z. are vulgarly interchanged by Hindus in pronouncing words of Persian origin.

Under A. *Persica* "arú" is the common N. Indian name; gharghastai is Pashtú, chínnánu not chimnánu is a very local name conferred to Pangi—the upper Chinâb valley.

Affixes or suffixes which signify "tree" or "gum" or "oil," as "khair ká lakri" (khair wood,) "eng-ben," "shá-ben" (*ben* being "tree" in Burmese,) nim-gachh (Bengali,) thingán-tsi (tsi meaning wood-oil), should be discarded, and the name only given. If the usage of the language requires the addition, this should be noted.

A few notes of some of the doubtful points, the clearing up of which would be interesting, may now be given. It is hoped that some persons will find time to clear up one or more of them.

Acacia Arabica.—The habitat of the species is not properly given; it grows all over India in the plains up to the Indus; it abounds in alluvial lands in Sindh.

Generally speaking, it would seem that the southern localities produce a darker gum than the northern.

What is the proper season for collecting the gum, and how is it effected?

Acacia Catechu.—Have samples of the Burmese product been sent to the Museum? the extract is however not treated of in the report, only the gum: is this ever collected in Burma?

SIRIS.—Authentic specimens of this gum are needed; we have the common roadside siris (A. Lebbek Willd) and others, the A. procera (Benth.) with white bark called dhún or safed siris, and *Albizzia odoratisima* which is also called siris or laorin (sub-Himalayan.) The latter yields a dark brown gum (Brandis).

ACACIA MODESTA.—A characteristic habitat of all hills and jungles in N. W. Punjab is omitted.

APRICOT.—I believe the gum is commonly collected in the hills where the apricot (with a small indifferent fruit) seems almost wild.

NIM.—Authentic specimens of this gum are required.

BAUHINIA.—Does the climber in the Terai forests yield a gum? (*B. Vahlii*).

TOON is said to yield a gum: this requires verification. Dr. Cooke says from the character of the timber it should be a resin. I see no reason for this; it is a scented wood, but in no way resembles any resiniferous tree.

CELTIS.—In species in the Punjab hills .do they yield gum? (BRANDIS puts them under one *C. australis L.*) We certainly have two plants, the Chamba *celtis* (khark) and that of Hazara, to appearance very distinguishable. STEWART calls the latter (batkar) *C. Nepalensis* (Punjab Plants, 210).

GOSSYPIUM.—Common cotton plant. This is said to yield a gum. Surely, it must be a mistake. Dr. Cooke speaks (under this head) of cotton-tree gum; does he mean *Bombax malabaricum* (*Salmalia malabarica*, Schott.,) and which is called the "cotton-tree?"

HERITIERA LITTORALIS.—Dr. Cooke says he has no evidence whether produced in India. It certainly is a characteristic tree of the Sunderbuns in Bengal, where it is called sundar or sundrí. Does it yield a gum?

BAKAIN.—Is there really a gum of this species?

MULBERRY.—Is there a gum from this? if so, it could be had in large quantities.

ODINA WODIER, *Jingan.*—Will some officer undertake this species and clear up the subject which ought not to be difficult? It is said by some authors to give a *resin.* Then again it appears under the head of *varnish* yielding trees at page 123 of the Report. This tree seems to extend over the whole of South and Central India, and to North India as far as Oudh and the N. W. Provinces, and even sparingly into the Punjab in the lower hills as far west as the Sutlej region.

There is no sort of doubt that the jingan gum of this tree as found in the bazars below Simla, is white and soluble, and that in Hoshyarpúr species have been obtained of a clarified gum. It seems equally certain that a dark gum is yielded also, called "kanígond;" this I have never seen. Will some one collect real *odina* gum, with a specimen of the tree to prove its identity in each case.

The resin appears to me to be wholly a fallacy and also the wood-oil. I have little doubt that some people got hold of

the Burmese thingan and mistook it for jingan or jhingan, the easy confusion of J. and T. being obvious.

Thingan has of course a woodoil or oleo resin.

Forest officers should be able easily to clear up the question.

SAPINDUS.—The soap nut tree (ríta). Does this really yield gum? and which species? *S. acuminatus* (*S. detergens*, Roxb.) or *Emarginatus*.

SEMECARPUS.—(The marking nut tree). The same question has to be asked: BRANDIS says a brown nearly insipid gum exudes from the stem.

SPONDIAS is not common in the Punjab, where it is small, and grows only as far as the Salt Range; but it grows to an enormous size in Burma (Pegu), where it is called kway-ben (Kwé-ben); specimens of its gum are wanted.

TAMARIX-DIOICA (should be *T. articulata*). *T. dioica* does not yield a gum that I know of, where is it called asul? the common North Indian names are "farásh," "farwá," and "úkhán."

The TERMINALIA gums want investigating. Does the saj or asan (C. Prov.) yield gum? and of what sort? Does bahera in Midnapore forests?

VACHELLIA.—The genus is not now distinguished from *acacia*. I believe Acacia Vera, A. Arabica, and the so-called Vachellia are practically undistinguished; as regards gum, *Acacia Farnesiana* gum, BRANDIS says, is collected in Sindh.

Zizyphus flexuosa.—I feel sure this is a mistake, and that "simli" of the Central Provinces has nothing to do with *Zizyphus*. Will some Central Province forester send simli gum with a specimen of the tree?

Zizyphus flexuosa (*Z. vulgaris*, Lam.) is not the common "ber," which is *Z. jujuba*, Lam. (var *Hysudrica*, Edgeworth). *Z. flexuosa* occurs chiefly in the N. W. Punjab and in Hazára under the very local name of sinjlí. I never heard of any variety of "ber" tree giving gum; it is one of the lac trees.

With regard to the DOUBTFUL GUMS on page 29 (a great many more are very doubtful I think), "*dhas*" gum is probably a misreading for dhái or dháwí gum (Grislea tomentosa). The

G. tomentosa is called dhái, and *Conocarpus latifolius*, dháú or dhoni, as if one was the male, and the other the female in the ideas of the natives; hence perhaps the confusion of the gums.

Salhé or saláí is said to be a name of a kind of gúgal or balsamodendron (*Boswellia thurifera*), which is found in the Bengal hills and Rájputána, and to within 20 miles of the Bombay Ghâts.

Then we come to the PSEUDO GUMS which are insoluble.

STERCULIA.—The Burmese species (chiefly valued for bark fibre are :—S. *ornata* (shaw-wáh), S. villosa (shaw-ní), *S. fœtida* (shaw-byú).

MORINGA (*sohájna*). Authentic samples from various localities are much wanted; but there must be no doubt about the tree—everybody knows it—specimens of the tree to authenticate the gum required.

BOMBAX (*Salmalia*), sembal or simal tree.—This very doubtful gum could finally be cleared up by foresters. Every one knows the cotton-tree, *Bombax heptaphyllum* (*B. malabaricum* in F. Flora). Will some one really get gum from it beyond all doubt? At present we are divided between dull red gums like sohájná, &c., and a sort of hollow blackish shell like a *gall* or similar excrescence.

MOCHRAS is also one of the undetermined substances. Those in Burma and elsewhere also as near areca gardens would be able to tell us whether the areca has a *gall* on it. "Phúl-supyárí" is a name signifying "areca-flower," and given by druggists to the gall-like substance called mochras.

Butea frondosa (dhák or palas.)—This it is noted has *good timber!* The wood is probably more worthless than any other known tree; it dries down to ⅓rd of original weight, and is used for making scabbards of swords, &c. In what provinces is kino or "kamar-kas" collected?

There is a creeper or climbing species of *Butea* in the Bengal Terai, which when cut across gives out a copious exudation of red juice.

The part of the report treating of gum resins, both medicinal and fragrant, and on soft or elemi and hard resins is full of

interesting information : the articles on Gamboge (pp. 41—49), Asafœtida (50—57), and on Amoniacum and Galbanum being specially full and exhaustive. In the article on Asafœtida however there is a passage which it is not easy to understand.

There are two substances in Bombay, one of the color of treacle in large masses enclosed in cowhide ; the odour is different from that of the European drug, and is much more powerful. It would appear that this is called "hírá hing," while the common asafœtida is called "hingra." Thus we read :—

"The substance known as asafœtida in Europe, is called hingra in Bombay; it is not used as a condiment, and is considered quite a different article (*i.e;* from hírá hing), it is exported to Europe. There is great difference in price. Hingra is about Rs. 7 a Surat maund, and asafœtida about Rs. 45." This passage as it stands is unintelligible—perhaps it means that asafœtida costs Rs. 7, and that the hírá-hing (a substance *not* known in Europe as asafœtida) costs Rs. 45.

OPOPONAX.—The origin and meaning of the native names of this drug will be found in Punjab Products, I, pp. 402-3.

Similarly interesting are the articles on Fragrant Gum-Resins, Myrrh, and Olibanum.

But all trees yielding gúgal or kundar in India want carefully collecting both the gum resin and specimens of the tree, with localities.

It strikes me that the species are confused. *Balsamodendron Roxburghii* perhaps gives the Bengal gúgal, and possibly most of the Indian gúgal. Then the Sindh species is called *B. mukul,* and another species *B. pubescens* is also said to grow in Biluchistan. It is not likely that the Sindh or Biluchi species would be common in Bombay and Central India, yet with *B. mukul* are given a variety of Hindi and Central Indian names. Should not these rather refer to the *Boswellia thurifera (B. glabra,* Roxb.), which would seem to be the source of the salhé of N. E. Bengal, and the sálaí of Bombay presidency ? The "*Palamore* forests" referred to at p. 81 probably means "Palamow" (as usually spelt) in Bengal. The salhé (or salái ?) is said to be abundant all about the Rájmahál hills.

With regard to the mango gum resin, it will be possible to enquire further about the Delhi specimen which was sent distinctly labelled to the Exhibition at Lahore in 1864, and answered to the description given in Punjab Products (p. 416.)

The very full and interesting papers on OLIBANUM constitute one of the chief features of the volume. The relation of salhé to this substance has been already touched upon. *Boswellia thurifera* has its habitat given as "tropical India." It should rather have been Bihár,* the Dakhan to within 20 miles of the Bombay Ghâts, Bandalkhand, Rájputána, the Central Provinces, and in sub-Himalaya as far as the Sutlej, also in South India. BRANDIS says that it grows chiefly on hot arid hills more or less gregariously, forming open forests often associated with *Sterculia urens*—particularly abundant on the trap hills of the Dakhan and the Satpúra Range. It is common also in the Rájmahál hills.

PWAI-NGET.—There is no sort of doubt that the proper substance described by this name in Burma is the resinous nest of the little bee, *Trigona læviceps*. I have collected pieces myself in hollows of trees in the forest, and watched the bees making the nest. They chiefly collect resin for the purpose (when I saw them in Pegu) from the *Dipterocarpus tuberculata*. (Eng.)

It is quite likely that their nests vary according to the kind of resiniferous trees common in the neighbourhood. It is also likely that bazar specimens would show the name applied to other resinous substances, or to the true substance worked up or melted down with some admixture. Will MR. KURZ tell us about this? and whether the *Canarium strictum* is a Burmese tree, and what the Burmese black or dark resin giving species (officinal) are?

Little remains to be added to the exhaustive account of the COPAL (sundras commonly also called "kahruba" or amber). This resin (erroneously referred to *Vateria* in Punjab Products, p. 410) is derived from the euphoniously named *Trachylobium Mozambicense* (Peters). The papers by the Assistant

* *Vide* Hooker's Trav. in Himalaya, Vol. I., p 29, where it is said that in the Bihár hills at 1,360 feet, "the gum celebrated throughout the east was flowing abundantly from the trunk, very fragrant and transparent."

Political Agent at Zanzibar, reprinted in the *Indian Forester* for July 1875, do not appear to have been seen by Dr. Cooke.

There is also a recent paper read before the Linnæan Society (April 20th, 1876,) on the fossil copal found on the east coast of Africa in places where no copal tree now grows. Little doubt exists as to the identity of the semi-fossil tree with the living species, inasmuch as parts of the plant have been found preserved in the fossil resin or animé.*

PISTACIA.—Two species yield mastich. In Sindh (which country people will insist on "——" and calling Scinde) the resin is called "honey of kundur," or simply "resinous honey," shaht-i-kundru. The Arabic names 'Alk-ul-anbat and 'Alk baghdad are hardly recognizable as Auluk dagdadie (*sic*) and Aluk-ool-unbat.

DIOSPYROS.—Something wrong here. The species would seem to be as follow :—*D. melanoxylon*, Roxb., not mentioned as a resiniferous tree and very unlikely.

Then also we have *D. montana* in India (not in North or Sindh), also *D. chloroxylon* (S. India as far as Orissa on the east, and Guzerat on the west coast), *D. lotus*, the fruit-bearing N. W. Punjab species ("amlok"), and *D. embryopteris* (*E. glutinifera*, Roxb., *D glutinosa*, Koenig), the gáb of Bengal, South India, and on the western coast, Ceylon, Burma, Bengal, Banda, and sub-Himalaya as far west as the Jumna.

The viscid pulp of the ripe fruit is used as a gum in book-binding and in place of tar for the seams of fishing-boats—an extract containing much tannin is made from the fruit (see Brandis' F. Fl., p 298). This fruit is called kendú in Assam apparently, but kendú and tendu are names usually given to *D. melanoxylon* which has the heart wood black, and is used for ebony. If the fruit is meant in the text, we have neither gum nor resin properly so called to deal with.

MR. GUSTAV MANN will probably be able to enlighten us on the subject.

---

* At pp. 106-7 a series of "Inquirenda" are given, to which it is sufficient to invite attention.

* *Vide* Pop.'s Science Rev. for July 1876, p 320.

No. I regarding the "Moal" of Sylhet will probably be answerable in Bengal.

No. IV.—Officers in Burma and Madras could probably discover.

No. V has been alluded to already.

No. VI is a question for residents in the Andamans.

No. VII.—Bengal officers could settle.

Under the head of Kunnee, (Kani), p 110, the Odina question already alluded to crops up again.

And a question is asked about a Bombay (?) resin called mál shakshi.

It is no wonder that the Vienna exhibition samples turned out so badly. The whole business, as far as my knowledge goes, might be described as a perfect humbug.

When will committees charged with such affairs understand that, with the heavy work Indian officials have to get through, the distances to be travelled, and the difficulties of identifying species, good collections cannot be got together without *at least* a year's or eighteen months' clear notice? At the eleventh hour orders come; people hastily get together what they can, and the result is often unsatisfactory, if not useless. Of course, this is still more the case with manufactured articles which are rarely or never kept ready-made (especially the better class of articles), and any rubbish that can be found in the bazars is collected and sent. The wearisome delay in getting remittances of proceeds, discourages sadly the poor manufacturers of Indian goods, and only a few wholesale merchants, who do not produce the best work, send goods. European exhibitions as hitherto constituted, are a positive abomination. That of Paris in 1867 formed a tolerable exception.

The last group (oleo resins) has two divisions; *A.* balsams, *B.* varnishes.

First comes the *Balsamodendron Berryi*, whose extraordinary Arabic name "á qovoyalásamun" appears to me to have been formed by a misreading of the Arabic letters imperfectly pointed: q (the double-dotted "kar") being mistaken for the single-dotted similar form "fé" and "ye" for "be." This word is possibly

afáwa-balásamún; the Arabic form in Yunáni medicine of "opo-balsamum." My impression is that this druggist's substance known as "raughan-i-balsán" is usually an artificial liquid thick solution of one of the scented resins.—*B. Berry* is a South Indian species certainly.

DIPTEROCARPUS.—Wood-oil is certainly obtained in Burma both from the "Eng" (*D. tuberculata*), and Kanyin (*D. turbinata*): but most, I believe, and the best, form the latter.

CAMPHOR.—It is interesting to see that the common Hindustani name for camphor "kápúr" is a Malay word.

The liquid styrax is unknown to us here; but on what authority does Dr. Cooke give the plane (*Platanus orientalis*) as a synonym for the *Liquidambar orientale* of Anatolia, &c.? The plane is an introduced tree, and has only a naturalized Persian name "chinár," and a Kashmere name "búín" (the tree has very long been established there; one grove dates A.D. 1588.) Nothing less likely that any resin or oil should be obtained from it.

MELANORRHŒA.—For an interesting account of the method of extracting this substance, see Mr. Brandis' paper on some forest products of Pegu in the *Indian Forester* of April 1876. I cannot understand how this substance, seing its beautiful application in Burma, is not more appreciated in England.

Again under this head the ill-fated *Odina wodier* appears: who ever obtained a varnish from this tree? The authority is the "Bombay Products."

Will Mysore and Belgaum district Forest officers ascertain if BUCHANANIA LATIFOLIA yields a varnish? (chironji is the fruit kernel: chirauli, &c.) BRANDIS says that a pellucid *gum* exudes from wounds in the stem, and an oil is obtained from the kernels of the fruit (F. Fl., p 128).

RHUS VERNICIFERA.—The Japan varnish tree is said to be the same as a small species in the Himalaya (rikhálí, gadúmbal lohása, &c.), certainly we have nothing that yields a varnish. BRANDIS follows Decandolle and Royle in uniting the Indian tree with the Japan varnish tree, but feels assured the species are distinct (F. Fl., p 120.)

TURPENTINE AND TAR.—We have recently been selling tar from the chips of *P. longifolia* in our Kangra forests. It costs us Rs. 2-8 a maund=80lbs. to make. No one has, I think, yet attempted to distil spirit of turpentine. The crude resin of *P. longifolia* is beautifully clear in pale yellow tars as it exudes from the wood.

Both the pines *P. longifolia* and *P. excelsa*, as well as Deodar chips, make good tar by the same process.

The great difficulty of our making any profit out of such substances is the cost of carriage.

ABIES is one of the least resinous of our conifers, and no one uses it except for a local application to sore backs of cattle, for which purpose a tree (outside reserved forest let us hope) is ruthlessly notched. *Picea Webbiana* in the same way.

TEAK-OIL.—Burmese officers would probably have a good deal to add to the information given at p. 129.

In conclusion, I hope, some officers whose eye catches their own names, or the name of a province they know, will communicate with this periodical on the subject of the many "inquirenda et disputata" of the Report.

The Ficus Elastica in Burma Proper, or a Narrative of my Journey in search of it.

BY G. W. STRETTELL.

THE journey in search of the Ficus elastica in Burma proper lasted from the 22nd November 1873, until the 13th May 1874, and now after two years have elapsed, we are favored with the results of the "*mission*," as the author calls it. One would think that the report on a simple little trip in search of India-rubber might have been printed and published in less than two years, but some how or other India seems to be the land of delays. That the Govenment work does not gain by these everlasting and ever-recurring delays is self-evident, and it is really difficult to understand why they are allowed to take place. Our author gives a long explanation in his case, but we think delays like that in question cannot be satisfactorily explained.

From page 3 of the book we see that the original object which has given birth to the book, was as follows:—"To form "Ficus elastica plantations in British Burma, and to ascertain "the best method of working them. To facilitate this object "our author was directed to proceed at once to Upper Burma "and examine the forests there, making himself familiar "with the general habits of the tree, the soil, and locality best "suited to it, the different methods of tapping, and the various "systems pursued, in order to bring about the coalescence of "the caoutchouc."

The India-rubber trade of Upper Burma has sprung up during the last few years only, wherever it has existed in Assam and Cachar for many years past. In Assam large Ficus elastica producing tracts are situated within British territory, and any officer can study the habits of the tree and the mode of working quite at his leisure, and without any particular danger. In Upper Burma, on the other hand, the India-rubber forests are situated beyond the reach of any authority, except that of lawless mountaineers, and any attempt to study here the habits of the tree would be coupled with great risk of life, if not altogether impracticable. Hence it appears to us difficult to understand, why Mr. Strettell was not sent to Assam, instead of to Upper Burma, if the "*mission*" was considered necessary at all.

We should think it was not necessary, because not only have we already in print as much information on the subject, as Mr. Strettell was likely to gather under the most favorable circumstances; and secondly we consider it very doubtful whether Ficus elastica plantations are indicated in British Burma. While the latter is not the natural home of the tree, Assam is. Moreover, in Assam any amount of land suitable for plantations is available, and labor is about half as expensive as in Burma. Considering all these points, and also that it is perfectly irrelevant in what part of India the caoutchouc is produced, we do not understand, why the Government should spend Rs. 18,000 in sending Mr. Strettell to Upper Burma, and letting him print afterwards at Government expense a large book on his "*mission.*"

However, if Mr. Strettell had succeeded in his "*mission*," there would be some return at least for the outlay; but what was our surprise on finding, after wading through 207 pages of print, that Mr. Strettell never got to the real India-rubber forests, but turned round after he had seen one or two outlying patches. The consequence is that the book four beginning to end contains nothing new as far as the Ficus elastica is concerned, but a great deal extracted from books and reports which were already at the disposal of any one who wished to inform himself on the subject.

We need not add many more lines to bring our review of the book to a close. As stated above there is nothing new in the book regarding the Ficus elastica. On the other hand, as a book of travel it is not uninteresting, but we must leave a review of the book in that respect to those into whose department it legitimately belongs.

Sw.

The Forests of Victoria.

(*The 1st Annual Report*, 1875.)

THE total area of Forest reserves is 1,155,664 acres=1,805 square miles. They are all declared by notification in the *Gazette* like ours. They are classed as "State Forests" and "Timber Reserves," the latter being intended for temporary supply of fuel and fencing to the surrounding population. The Reporter states that reclassification is called for, as many of the reserves are quite denuded and worthless.

The really well timbered or first class State reserves are nine in number:—

	Acres.		Acres.
1 Burma ...	19,600	6 Bullarook ...	110,000
2 Moira }	45,000	7 Grampians ...	134,576
3 Yellima }		8 Mt. Cole ..	32,470
4 Gunbower ...	70,000	9 Victoria ...	136,000
5 Cape Otway ...	193,000		

To these may be added—Mt. Macedon (14,685), and Dandenong (26,500) valuable rather from their position than from their contents.

The first four constitute the Murray river forests, containing box and acacias of little value on the dry loamy plains, swampy flats (often flooded from 2 to 5 feet during winter) and yielding red gum *(Eucalyptus rostrata)*.

The report estimates the forests to contain 4,00,000 trees, yielding each an avarage of 700 feet superficial. The consumption by the sawmills is estimated at 1,30,00,000 feet superficial per annum. There are also sandy hills covered with Murray pine (*Callitris verrucosa*).

The destruction of the pine is frightful, both seedlings and saplings rapidly disappearing; the red gum has good natural reproduction. Data for the growth of red gum are wanting, but it grows on swampy clay beds overflowed during 6 or 7 months of the year. Young trees have been observed to make 3 to 3½ inches *diameter* in five years, and the growth is more rapid in the later years of growth. Sawyers select trees from 2 to 5 feet in diameter. Forest fires are a geat nuisance. In West Gunbower 3,000 acres are partially destroyed, the seedlings being wholly so.

Mt. Macedon was once covered densely with timber, but "great as has been the consumption by sawmills and splitters, it has of late years been nearly equalled by the destruction caused by fire." Natural reproduction, however, if favored, would in many places be sufficient. On the other hand, the reporter observes that the numerous seedlings which follow a bush-fire show that it is the existence of the scrub that prevents the starting into life of the seed; this may be true, but it must not be taken as an argument for fire (except on the principle of burning weeds); because if the fire is repeated after the seedlings were up, they would be destroyed in their turn.

Cape Otway contains blue gum (*E. globulus*) which has been much burned. "On either hand," writes the forester, "from a point between 5 and 6 miles from the coast most of the ranges are covered with immense white stems of dead trees marking exactly the course and extent of the destroying agent." Other common trees are the messmate gum (*E. fissilis*) and stringy bark (*E. obliqua*): iron bark (*E. leucoxylon*) is less abundant.

It is to be remembered that this is the *first year* of the Forest Department, and foresters have only just been appointed.

The forester of Bullarook says that forest trees are cut at pleasure, and says that it is customary in England for the forester to *mark* trees to be felled. This (he modestly adds) is only a suggestion which would no doubt entail a considerable amount of extra labor (! !)

It takes time, we may learn from this, for the most elementary protective measures to be adopted. Even in our not very advanced stage, we should be astonished at the idea that trees might be felled without being marked, in a State Forest; but in Victoria the forester deems it needful to apologize for suggesting the practice.

In the Colony there is a fine State nursery, and great success has been attained in planting exotic trees. The nursery is at Mt. Macedon, and consists of 8 acres which is worked by the addition of rich vegetable soil, &c., collected from localities in the neighbourhood.

Among the best species are *Abies Douglasii,* the Norfolk Island pine (*Araucaria imbricatu,*) our own cedar (*C. deodara*), and the Atlas and Lebanon varieties, our *Picea Webbiana* and *A. Smithiana,* and *P. excelsa,* black walnut (*J. nigra*), oak, chesnut hickory, elm, ash, and many others. The olive (*O. Europea*) is grown as a hedge plant, and *Cupressus torulosa* is stated to be so also.

Pinus insignis, C. deodara, and *Wellingtonia gigantea* are said to grow as well as could be desired. The report also gives a note on the growth of exotic trees near Melbourne.

Abies Douglasii, which is said to be suited for growth in cool mountain glens, and will not stand exposure, had grown 25 feet since 1863, when it was planted.

Abies Smithiana is described as a *noble tree,* and in India forms *splendid* timber for railway sleepers and other purposes where strength is required. That this wood (from forests where it is well grown) is very good for in-door work, and is vastly under-rated as a rule, there is no doubt: but this description goes rather too far.

Cedrus deodara was raised from seed in 1863, planted out in 1865, and some had reached a height of 20 feet "well furnished with great expanse of branches in 1875."

Some of these trees from exposure to prevailing winds lost their leading shoot, but though retarded in growth by this, they have invariably formed new leaders. It is recommended that this species should be planted largely in "our alpine forests."

Several trees of *Cupressus torulosa* planted in 1862 had a growth perfectly astonishing; some being 40 to 50 feet high.

The success attained with *Pinus haleppensis*, which withstands heat and the drought of summer, seems to warrant our trying it to aid our "Chil" forests, which *all*, be it remembered, even the best of them, want to be improved by undergrowth and admixture.

Pinus Brutia, the Calabrian clusterpine, reached a height of 20 feet from two years' seedlings put out in 1864.

So much for forest growth in Victoria: the conditions however of labor and value of wood are so curious that they demand a notice, and the conclusions which the Inspector draws are equally curious. "In attempting," writes the Reporter, "to devise a practicable scheme for regulating the timber supply, attention is naturally directed to older countries, but with poor results; for the circumstances surrounding forest matters in Victoria are radically different from those existing in any old settled country in which a proper system of forestry has been perfected."

It is said in illustration of this: 1st, that the forest area in Victoria, whether reserved or unreserved, holds the position, rather of "timber commons, over which rights of commonage, are granted on payment of certain fees."

Next comes the value of the timber and its relation to that of labor.

In Europe the price of ordinary Scotch fir and larch of small size is from 8*d.* to 1*s.* per cubic foot. As of this sum 1½*d.* to 2*d.* per foot is cost of felling and cutting, the value per foot in the forest is from 6*d.* to 10*d.* The value of hard wood is of course greatly in excess of this (oak is 2*s.* 6*d.* to 3*s.* per foot),

but as the position of hard wood and soft wood in European markets is reversed in Victoria, it will answer a general purpose so to compare them.

"Balk timber" costs the sawmiller about 2*s.* 6*d.* per 100 feet superficial or 3½*d.* a cubic foot to compare with the 6*d.* or 10*d.* of Europe, and this price is for red gum, which is more comparable to oak than to common Scotch fir. But of this 3½*d.*, how much is the value of the wood, and how much the value of labor in felling and taking it to the mill? Felling and conversion into logs costs 7*s.* per 100 superficial feet, or say 2*s.* 6*d.* to 3*s.* per log. Next the Reporter urges that the price received by the State is the *value of the* timber: at least it is virtually the price at which it is sold to the consumer, as much as the 6*d.* or 10*d.* in Europe is. One is inclined to ask why does the State fix that price? The State gets 25*s.* for each quarterly license to fell; as this may be taken to cover about 72 trees (red gum), the price per tree is 4*d.!!*

The cost of carriage to the mill averages 30*s.*: taking a general average, and including the cost of felling and logging it may be said that a tree costs 40*s.* at the mill.

That is to say, that, instead of the value of the timber when delivered ready for conversion, representing from 5 to 25 times the value of the labor expended on it, as in Europe, the conditions in Victoria are reversed. The actual cost of the timber being, to the cost of labor in getting it to the mill, as 1 : 120.

Then again there is the cost of transporting the converted timber from the mill to the market, which is averaged at £2 per tree.

The result of the exceedingly low rate at which the standing trees are bought from the State, is that a man will fell a tree, and if there is the least fault to find with it, he will fell another and abandon the first.

We have read through the report in vain, to discover why the State could not charge more for licenses, even supposing that system in an improved form to be continued. The market price is very little in excess of the cost of labor expended on the timber: but is the market price so high that, if the

first cost of the timber were raised, no one could afford to buy wood at all? What regulates the market price?

But it is said that the present state of things constitutes an insuperable barrier to the introduction of any European system. In the latter case (it is said) the whole system is based upon the value of a cubic foot of timber as it stands in the forest, while in the Colony this basis "only exists as an item of calculation to the miller, to be taken into consideration, when reckoning the cost of procuring the timber, converting it into the required forms and placing it in the market."*

This, it is difficult to avoid calling nonsense; European systems are no more based on the value of a cubic foot of timber than on the price of tallow.

The normal annual yield as the criterion of outturn, calculated by accurate observation and survey, or in other words, the principles on which any working scheme is based, must be the same, as long as trees grow on the same physiological principles. Perhaps the Inspector means that the value of timber being so small, it is impossible to spend any money on it: or that if they raised the price, the demand would fall off to such an extent, that they could not tell how much area they wanted for internal or external demand. Neither of these seem, however, probable. There does not seem to be any serious obstacle in the way of forest improvement, or rational working which would consist—

In visiting the workable reserves, dividing them into blocks and by a preliminary plan determining the yield.

Licenses confined to marked trees, of a number not exceeding the mean annual yield, might still be issued, only supervision would be exercised over the cutting.

No notice seems to have been taken of the important subject of preserving forest on the slopes of hills or around the sources of streams and rivers.

Until Victoria takes a very different view of how to set about arranging forests, we shall hardly be able to congratulate them on the new Forest Department.

---

* Market value at Melbourne is 16*s.* to 19*s.* per 100 superficial feet. Skilled labor costs 8*s.* to 12*s.* *per diem*, ordinary 40*s.* to 45*s.* *a week*.

The following meteorological data may be given in conclusion. They will be valuable in comparing notes with India. Melbourne is 91 feet above sea level, and the figures give the average of 14 years :—

Season.	Mean temperature.	Rainfall.	Surface soil temperature.	Mean Humidity.	REMARKS.
		Inches.			
Spring—(Sept.—Nov.)	57°	7·79	62·0°	70 P.C.	Highest recorded temperature 111·2° (Jan.)
Summer—(Dec.—Feb.)	65·3°	6·41	76 5°	65	Lowest 27° (July.)
Autumn—(Mar.—May.)	58·7°	5·78	61·9°	73	Annual average rainfall. 25·65 inches; greatest, being 44 25.
Winter—(June—Aug.)	49·2°	5·67	49·2	79	Least being 15·94.

B. H. B.-P.

A few Notes on "Suggestions regarding Forest Administration in British Burma."

BY D. BRANDIS, F.R.S., *Inspector-General of Forests to the Government of India.*

IN admitting that no one is better competent than Dr. Brandis to grapple with the difficulties which beset Forest administration in British Burma, it is not necessary that one should go the length of agreeing with him in each and all of his proposals.

I purpose confining my criticism to a few points only, and firstly to the fundamental position advanced in para. 18 of the pamphlet, on which it is presumed Dr. Brandis has based all his proposals for the settlement of rights. Dr. Brandis argues :—

"All unalienated forest land in all other parts of British Burma is, with all the products growing upon it, the absolute property of Government, subject to such prescriptive rights as may have been acquired by the agricultural population in the vicinity of the forests. This right of Government is proved sufficiently, if proof be needed, by the grants made some years ago under the waste-land grant rules, under which

large areas of waste and forest have been disposed of without reservation." Now here it is very difficult to escape the conclusion that Dr. Brandis, while he wrote, was preparing himself for the sacrifice of principle to expediency, and that in his anxiety to temporise, he has committed himself to a paradoxism. If the instance adduced, the sale of forest lands, without reservation, proves anything, it proves that the Government held itself to be the absolute proprietor of the land, *untramelled by any obligation to the villagers,* who, if they had possessed legal rights in the alienated forests, could have prevented the alienation, or claimed a share in the proceeds.

The fact is, it appears to me, that the Forest Department by its demands for absolute authority over the forests, has provoked the District Officers to the support of forest rights as against the Department.

It is not my intention here to enter into the desirability of conferring rights in our forests, nor to argue whether the rights of District Officers are beneficial or otherwise in their exercise, but what I do maintain is that the Government of India is the sole proprietor of its forest, except in so far as it has vitiated the position by recent legislation, and that the question of conferring further rights, is one solely of expediency and to be treated as such, if we are to avoid paradoxes in the discussion of the question.

If this view is wrong the Government has rendered itself liable to actions for every acre of forest land it has alienated without the consent of every third party having rights in such alienated lands.

The general scope of the "proposals" is the division of the forest area of Burma into three classes: 1*st.* State forests to be under the control of the Forest Department, but subject to certain rights of neighbouring villagers to be formally settled and registered. 2*nd.* District Forests in which for the present the timber trade shall be under the control of the Forest Department, while the permits for all timber for local use (free permits), together with trade permits for charcoal, cutch, and wood-oil, should be granted by the Civil Officer on payment (the revenues from these sources being credited to the

Forest Department); ultimately (after the first class of forests shall have been demarcated) it is proposed to vest the control of these forests entirely in the hands of the Civil Department. 3rd. Communal or village forests, to be administered by the State for the benefit of the villagers.

The proposals for the management of District Forests appear to me to merit further consideration. It is a cumbersome method to have two departments granting permits in the same forest, each sending the other the counter-foils; it would be costly to maintain a double staff of officials when the duty could be performed by one—it would be inconvenient to traders to have to go to the Revenue Officer for their permits for charcoal or cutch, and to the Forest Officer for their timber, and hardly possible but that with two Forest Chiefs, each independent of the other, there should not be some clashing, indeed Dr. Brandis appears to have recognised this later on, for in para. 29, after hinting at the necessity of placing Forest Officers in a more definite relation to District Officers, he advocates the Forest Officer falling into the position of Assistant to the Deputy Commissioner, and especially in District Forests.

The first proposal has little to recommend it. If it is determined to allow certain villagers to exercise the right of felling all but teak timber for their own requirements, it is rarely necessary or profitable to hamper all parties with permits.

It is only necessary to notify to the Forest Department that the Government has been pleased to make certain concessions, and the Forest Officer may be relied upon to give effect to his instructions. The District Officer, with his multifarious duties, has far less time than the Forest Officer to devote to the matter, and no good purpose whatever can be attained by empowering the former to issue either free or trade permits for forest products. It is quite sufficient that his magisterial powers enable him to take cognizance of any complaint on the part of the villagers that any obstacle is thrown in the way of their availing themselves of the privileges conceded them by the Government. Dr. Brandis does not even attempt to argue that any advantages are likely to flow from the proposal, and I can

only regard it as a half-hearted and inadequate attempt to conciliate the District Officers.

The next proposal that, after the demarcation of the State forests, the remainder constituting the great bulk of the forest area shall be administered by the district authorities, aided by Forest Officers, to be attached to them as Assistants, is hardly more satisfactory. These Assistants would frequently be young men wanting the experience of their departmental seniors to guide them; but Dr. Brandis perhaps purposely made his remarks on this subject suggestive only preferring that definite proposals for the general subordination of the forest executive to the District Officers should emanate from the latter or the Chief Commissioner. The proposal, as it stands, would still be unsatisfactory to the District Officer, as it would exclude him from any voice in the administration of the State forests in his district. Moreover, the mere fact that some forests are to be cumbered with heavier rights than others, is no adaquate ground for placing their administration in the hands of two separate departments. They are all State Forests; it is to the interest both of the Government and governed, that the administration of all alike should be vested in the most competent hands, and the advantages of treating them all uniformly as a valuable State property are of far more importance than the minor question of whether Forest administration should continue aloof in its own independent groove, or be merged in the general administration of the country.

I am disposed to advocate this total absorption of the Forest Department in Burma, firstly, because its immediate results will be to render the whole forest area State forest without distinction; secondly, because I am strongly of opinion that to vest District Officers with the responsibility of Forest administration, will be to ensure the examination of every question as it arises from the Forest Officer's stand-point as well as from their own.

The details of the scheme present no practical difficulty—there would be a Deputy Conservator or Senior Assistant in charge of the forests of each district, receiving his instructions

from the District Officer only, but subject to the periodical visitation and counsels of the Provincial Forest Chief who would be constituted Provincial Inspector-General; and the extra allowance, which Dr. Brandis suggests for those Assistants whom he proposes to transfer to the charge of District Forests, might advantageously be made to depend on their qualifying themselves for magisterial duties. Thus qualified their leisure during the rainy season could be profitably employed, and their sphere of usefulness would be enlarged to the benefit of the State, and necessarily to their own.*

BLACKTHORN.

Punjab Plantations.

DEAR SIR,—An extraordinary statement which appears in your number for July 1876, page 69, where, in reviewing the General Forest Report for 1873-74, you say that the area of Punjab plantations was reduced by 7,872 acres *abandoned*; "which may be considered equivalent to an acknowledgment of previous mistakes."

This is not at all the case.

The total area of plantations shown at the beginning of the year was 21,970 acres, in which by some strange mistake the area of the *Reserved forests*, Kalatop and Bukloh, had been included. To deduct from the *plantation's* schedule the area of this forest (7,680 acres) was only to correct the error; it involved no abandonment of anything.

The plantation area, correctly stated, gives us 21,970—7,680=14,290 acres. During the year 1,452½ acres (extension) were added; a loss of 165½ acres occurred by river erosion; this, with the correction of certain errors in areas previously "estimated," left the total at 15,550½ acres.

A part of this area represents replenishments of existing forest (where reproduction had to be aided), and should not, in my opinion, be shown in a statement of artificial forest or

---

* Fortunately there is no danger of Government acting on Blackthorn's suggestion for some time to come.—THE EDITOR.

plantation area; but that has nothing to do with the question of abandonment.*

Yours faithfully,

B. H. BADEN-BOWELL,

Consr. of Forests, Punjab.

SIMLA, 14*th September* 1876.

* We heartily apologize herewith for our mistake in the July number.—THE EDITOR.

III. Notes and Queries.

Acrocarpus fraxinifolius.

This curious leguminous tree is one of the largest of our forest trees in South India. I have seen trees fully 200 feet high and 150 feet to the first bough, often of immense girth and with large buttresses, it is also a most valuable timber much in use for building purposes and for shingles, it is known to Europeans as the red cedar or shingle tree, and is called Malay yembu, Malay kone, and kilingi by the natives in different parts; its legume is not described, for owing to the great height of the tree, there was much difficulty about procuring it, and I only succeeded in getting specimens this season, it is long stipitate, dehiscent, 3—4 inches long by ¾ inches broad, with a short curved beak at the apex, and a broad wing along its upper margin, flat compressed and rather coriaceous, 4—7 seeded. I procured abundance of seed, some of which is being tried at our Nelambúr plantations, and the rest was forwarded to the Bangalore and Ceylon gardens, so it is to be hoped that the tree will be brought into cultivation; it grows in all our western forests from Canara down to Cape Comorin, and is found from low elevations up to above 4,000 feet, and though it generally affects the moist evergreen forests, it is often to be found outside of them and in bamboo tracts; its introduction to other parts of India is well worth the attention of Forest Officers.

R. H. Beddome, *Lieut.-Col.*,
Consr. of Forests, Madras.

Ootacamund, *29th June* 1876.

Beesha Rheedii.

This most interesting bamboo is, I believe, figured in Rheede's Hort. Mal., though I have not his work to refer to. I have been looking out for it since 1857, and though I have constantly passed through acres of it, I have never

noticed it till this year, the fact is it has never flowered since till this season, and bamboos are very much alike unless in flower, and I have never carefully looked at any unless in that state. Going down the Sispara Ghaut on the west slopes of the Nilgiris this year in May, I came upon it abundantly in flower and fruit, and obeserved hundreds of acres of it dead and dying out; it has certainly not flowered since 1857, so its duration is certainly 20 years, probably 25 or 30, and it dies down after flowering. I have collected quantities of its large egg-like berry which is quite similar to that of Beesha Travancorica (figured at plate CCCXXIV of the Flora Sylvatica), and as I have distributed them to the Lal Bagh gardens in Bangalore, the Peradenia gardens at Ceylon (and thence through the kindness of Mr. Thwaites to Kew I hope), and to the Calcutta gardens, it may, I trust, be brought into cultivation. It was first observed at about 4,300 feet elevation, and extended down the Ghâts to about 2,800 feet when its place is taken by Teinostachyum Wightii. It is not quite such a grand species as Beesha Travancorica (which is now in cultivation in Ceylon). Munro's description (taken probably from Rheede's figure, I have not the monograph at hand), as quoted in my Flora Sylvatica, if in reference to the same species which I think it must be, is not quite correct, the bamboo now alluded to has 30—40 stamens which are quite free, anthers not apiculate, stigmas 4-5 not twisted, paleae suddenly mucronate, leaves 1½ to 2½ inches broad; sheathes very hirsute when young, and with very long white ciliœ at the mouth, and with a long terminal beak at the apex. Good dried specimens have been forwarded to Kew.

Since writing the above one of my officers has received flowering specimens of this from Mr. Griffin, a coffee planter in the Ochterlony valley, with a note that he has been watching it for 20 years, during which time it has never flowered, that it is of the greatest utility on his estate (3,000 feet,) and that he now fears it will all die out.

R. H. BEDDOME, *Lieut.-Col.*,
Consr. of Forests, Madras.

OOTACAMUND, 29*th June* 1876.

The Forest Department in Madras.

THE heavy indictment against the Madras Forest Department, which we reproduce below from the *Pioneer* of August 15th, 1876, will not, we hope, be received by the Madras Forest Officers with resentment, but as a welcome opening to a decided and powerful move on their part. It is not, we are confident, the fault of the Madras Officers that the forests are undemarcated, are destroyed without check, that the reports repeat year after year the same sad story of fires, cattle-trespass, and waste: nor is it their fault that the forest finance is in an enfeebled condition, and that hundreds and thousands of rupees are annually converted from Imperial revenue to local purposes, and do not appear in the Forest accounts. It is the fault of the obnoxious system which places every Forest Officer in subjection to the Collector, the relation being at once unsatisfactory and undefined. There is, as yet, no recognition of the principle that, if forest divisions can be made to coincide with civil or fiscal ones, and a Forest Officer placed in each subordinate to the civil authority, it is a good thing in various ways; but that is essential under such circumstances, that the forest area should be determined, and the professional principles on which its management and exploitation rest, should be determined, and should be followed out solely under professional supervision.

It is time really that the Madras Government should insist on a demarcation of forests* to be preserved either for the State or (where that is not possible owing to the wants of the people) for the use of towns, villages, and communities, but in either case to be preserved, and a fixed yield taken from it according to its capacity. All professional matters regarding the treatment of the area so demarated should then be directed responsibly by the Conservator of Forests.

All forest income should be openly credited to Imperial revenue, and no expenditure made against such income, but what is legitimately connected with forest work.

---

* It is commonly believed that the action of Government is likely to cause the loss of the whole of the forest area of Kanara.

It is very much to be rejoiced in that the Public Press in India is beginning to take up forest questions in an enlightened spirit, and to appreciate the immense economic importance of our forests, not only as a set of live timber yards, but as features in the natural organization of the country, which can no more be safely disregarded, than can the important functions of roads, railways, drainage works, or rivers.

The *Pioneer* doubtless did not forget the work already done in Madras; the fine Nelambúr teak plantation, which is now extending by a small area every year, and the successful plantations of Eucalypti in the Nilgiris (though of insignificant extent; only 930 acres about), and the satisfactory financial results that these have shown.

But these successes in so large a territory and over such a number of years, poorly compensate for neglect elsewhere in the work of placing under proper treatment sufficient areas of natural forest.

With this brief preface we leave our readers to consider the article in question, and hope that it will elicit from the Madras side a frank discussion in a friendly spirit, remembering that it is an attack on the system, not the men, and is designed to help in correcting errors, not to hurt professional or official feeling.

From the Pioneer of August 15th, 1876.

"Forest conservancy in Madras appears to be in much the same position as it is in other presidencies. There is a regular department, and the officers in the department receive yearly praise for the way in which they do their work. But nothing is known about the actual resources of the forests, and very little is done to mark off new reserves, or to preserve existing ones. The Government of India have recently expressed a strong opinion as to the necessity of determining once for all the forest tracts which should be reserved, and to acquiring in them absolute ownership on behalf of the State. In Madras the forest land is very extensive. The Board of Revenue mention ten forests, the united area of which is estimated at between 5,000 and 6,000 square miles. No information whatever is said

to be available for the other forests. The question of a survey has long been mooted, but nothing has yet been decided. At present there are little more than 100,000 acres of "reserves," and the plantations are not very flourishing. If wood plays the important part in the economyof India, which it is supposed to do, every year's delay to effectively conserve selected areas of forest will entail serious consequences in the future. More harm can be done by cattle, and the wanton felling of timber by villagers, in one year than it is possible to repair in ten. To take one instance out of hundreds. The base of the Nilgiris is fringed by low acacia forests. Every year, says the Deputy Conservator of Mettapoliem, thousands of satin wood and other valuable trees are lopped and felled in the hot weather to feed the large herds of goats which natives keep there for supplying the hill market with meat. Native *shikaris* also do a great deal of harm. The Deputy Conservator found on one occasion a fence, half a mile long, "constructed with satin wood and ebony, and other valuable saplings, with staked gaps every ten yards for impaling deer. In their periodical hunts, they fell lanes from half a mile to a mile long, cutting down everything in their way, and setting nets for deer in the gaps." This irreparable destruction of timber goes on everywhere in India, unless stringent protective measures are in force. Sooner or later the country will wake up to the unpleasant consciousness that its natural wealth of wood is not inexhaustible, and wish when too late that the evil had been grappled with in earlier days."

Contents of Air and Rain-water.

The following is form *Nature* (June 15th, 1876):—

NEW METEOROLOGICAL LABORATORIES AT MONTSOURIS.

M. Marie' Davy, Director of Montsouris Observatory, has organised, partly at the expense of the French Government, partly at the expense of the city of Paris, a chemical and microscopical laboratory for the analysis of all the matters in suspension in the air of Paris, both quantitatively and qualitatively. A certain quantity of air is constantly aspired by an aspirator in continued operation. The ozone acting on iodide

of potassium and starch liberates iodine. The quantity of ozone liberated is measured by a titrated solution of arsenite of sodium. The matters in suspension are collected on a glass plate, and the crop is placed under the object-glass of a powerful microscope magnifying 1,000 times. The principal forms are drawn, and plates are executed and published monthly in the transactions of the establishment. The analysis of rain-water is conducted on the same principles, and the results of chemical analysis are calculated and compared with the wind and other atmospheric circumstances.

We are indebted to M. Marié Davy for the principal results of the month of February, the first period for which the whole system has been put into complete operation.

The electrical department has been fitted up, after a preliminary trial, and has been in working order for some time. In order better to illustrate the importance of these researches we take the liberty of altering the figures in order to give the results in round numbers for the whole area of Paris within the fortifications. The surface is about 80,000,000 square metres. In February 1876 the quantity of atmospheric water was 4,500,000 cubic metres. This is about double the average, but in some years on record the quantity was even larger, in 1776 a century ago, it was more than 6,500,000 cubic metres. In taking as an average the analyses of rain-water at Montsouris, the 4,500,000 cubic metres contained 4,700 kilogrammes of nitric acid, and 10,700 kilogrammes of ammonia. This mass of nitric acid is supposed to have been produced by electrical reactions in the atmosphere, and ammonia only partly, as Montsouris is in the southern part of the city, close to the fortifications.

The 4,500,000 cubic metres of rain-water were also proved to contain 172,000 kilogrammes of organic matter, and 88,400 kilogrammes of metallic salts or products. A number of organic matters have been found to be composed of spores, parts of animalculæ, and even living infusoriæ. Amongst the metallic salts we must mention particles of meteoric iron, evidently of cosmic origin. It is contemplated by the city of Paris to establish similar observations in several parts of the city, and the

WEST BENGAL SECRETARIAT LIBRARY

careful comparison of these analyses will prove invaluable for establishing a number of most interesting facts having a bearing on the welfare of inhabitants, as well as on the elucidation of important scientific problems.

It is also comtemplated to make use of aëronautical ascents to test the air at any altitude accessible to a balloon with horizontal glass plates covered with glycerine. The moisture of the clouds is to be condensed on glass tubes which will be refrigerated.

The ozone testing and measuring has produced also startling facts. Although the quantity of ozone is very minute, amounting to only a few milligrams per 1,000 cubic metres, it has been proved that on February 27, the day of the ozone maximum, a quantity of 900 kilogrammes was floating over Paris, if we suppose that the quantity was the same as at Montsouris in the whole stream of air passing above up to the altitude of 1,000 metres.

These results are only a sample of those which may be expected from the constant application of the magnificent system which is now brought into operation for the first time, and of which it will be possible to say, *Vires acquirit eundo.*

Rats.

SIR,—In reply to Mr. Sparling's query in the July 1876 number, I have heard that the stinging hairs which cover the pods of *Mucuna pruritis* * ("cowitch" or "cowage"), if mixed with soil near roots of plants, drive away rats. So does cayenne pepper: but whether this would retain its qualities *long enough*, if put in the soil, I cannot say.

For seeds and (possibly roots?) moistening with kerosine is a preservative, and it is said not only to do no harm to germination and growth, but positively to aid them.

I do not answer for any of those ideas, I only throw out what I have heard for further enquiry or trial.

Yours obediently,

J. K.

---

* This seems in India the *seeds* sold by druggists under the name of kúnch gûnch, gûnch-gají or kawanch.

On the Effects of grazing in Sal Forests.

In the July number of the *Forester*, W. has dealt most summarily with my notes in the April No. on the effects of grazing in sal forests.

I readily admit that my statements were opposed to the experience of foresters, and that grazing is generally the greatest enemy to forests; but as in the case in question it checks the growth of the high grass, which in Assam has hitherto rendered our attempts at forest conservation unavailing, I have thought that some further notes might be permissible.

In the first place, my former notes should only apply to forests in the Eastern Doars, and those under similar conditions of humidity and soil. I have noticed the same effects in Kamrup, where the cultivations are frequently surrounded by splendid young sal.

It has been proposed to render all grazing illegal in the Eastern Doars; now if this provision were enforced cultivation near, the sal forests will be checked, and the cultivators will remove to a distance, leaving the forests to be surrounded by a howling wilderness of grass, which will be a nest for jungle fires. As our sal forests in the Doars constitute an area of nearly 400 square miles, we can afford to give up all surrounding grass land, and a well-stocked forest, with cultivation up to its boundary lines, is the ideal to be looked for. Now if it be found that the best forests are near cultivation, and if cultivation up to and grazing within the edges of the forest prove a check to fires, the District Officer and the Forest Officer will be better friends, and a class of wood-men, as are the Mechis, will not be driven away from their old quarters, but will be on the spot for any forest work which may be in hand.

The Sidli forest, referred to in the April No., contains about fifty square miles of nearly pure sal forest, with large patches of grass land, and with lower hill forest along the water-courses.

Cultivation has penetrated into the forest, and rice is grown on land artificially irrigated, the forest having been jhumed for

cotton cultivation, but not since the country has been annexed from the Butias. To this jhuming and to excessive felling the introduction of an undergrowth of grass, which grows up to 6 or 8 feet in height, has been due; only round the villages and their cultivations is the forest free from this grass, and here it is generally remarkably good as described in the April No of the *Forester*.

The grass in the forest is full of shoots of burnt seedling which are destroyed every year when the fires rage through the forest burning the trees up to the topmost leaf, except where the lower hill forest, or the close growing blocks near the villages, stop the progress of the flames.

The Mechis change their villages every three or four years, they settle in open grass land near a piece of sal forest to shade their houses. This sal forest is of course thin like the rest of the forest full of coarse grass, and not as assumed by W., so free from grass as to be comparatively safe from fire. Their cattle proceed to graze on, and trample down, the high grass in the forest near the village, so that in the dry season, instead of a uniform mass of grass, only high tufts are left here and there, the rest of it being low. The seedlings and shoots are so abundant that, if some be trampled down, yet plenty are left to stock the ground and, being shoots from old plants which have been burned year after, they commence growing vigorously as soon as they are freed from the grass.

I do not believe that common cattle graze off sal seedlings, as I have watched them carefully, whatever buffaloes may do, and the latter are not kept by the Mechis, nor do wandering herds of buffaloes come near the Sidli forests, and they can easily be kept away without affecting the villagers at all.

In the course of a few years after the village has been established, owing to the shortness of the grass, the fires get less and less fierce, if they get in at all, and the young shoots, with accumulated force from the large roots which such burnt seedlings have, grow up vigorously.

The larger trees also lose their charred bark, and soon shew the effects of their changed conditions. As the young sal grows up, less and less grass appears, and the undergrowth of

evergreen shrubs is encouraged by the increased moisture in the ground.

In the block referred to in the April No. of the *Forester* burned stumps were in the ground, and it was evident that fires had prevailed at no distant period. The villagers said that it was seven or eight years since they had settled there, and that the grass was kept down by their cattle, and that this had put a stop to the fires.

When once a forest has attained to such a condition, as that no fires get into it, the presence of cattle is rather prejudicial than otherwise, but as there is in that case little for them to graze off, they will prefer the grass outside.

When W. assumes that the forest in question was originally in such a condition, he begs the whole question.

Also his suggestion that the clearing of unreserved trees by the villagers for fire-wood affords the sal seedlings more light, will not account for the improved state of things consequent on the proximity of cultivation.

In the first place, it is nearly pure sal forest; in the second any more light would favor the growth of grass in which the seedlings are already choked, and therefore increase the fury of the fires. W. also speaks about the light grass growing in deserted cultivations, but the Mechis do not leave sal trees in the middle of their cultivations, and when all trees have been felled, it is difficult to see how forest blocks with 150 trees to the acre, as shewn in my former article, can have sprung up.

I believe that in Sidli deserted cultivation in three or four years' time becomes covered with dense grass, and never returns to forest again owing to the fires. W. also wishes preventive measures dictated by common sense and experience to be tried, but as he admits that the efforts of Forest Officers in the direction of fire conservancy have been so unsuccessful, surely common sense can afford to listen to other plans.

Supposing that the trampling and grazing of the long grass acts as a nutriment, and irrespective of the check which it causes to the fires, that it frees the young plants from the grass, and lets in light, it is surely of benefit. It should also be mentioned here that sal being the natural forest of the

Doars, it is extremely hardy, and as soon as the fires are checked, that it grows up irrepressibly.

W. R. F.

On the Killing of Trees.

TO THE EDITOR OF THE "INDIAN FORESTER."

SIR,—I should feel much obliged if you would kindly insert the following letter in your October number of the Magazine:—

R. WHITTALL.

"With reference to F. B.'s answer to M. H. F. in the January No. of the *Indian Forester* for 1876, it is greatly to be regretted that F. B. has adopted a sneering tone in his remarks.

"It is difficult to quite understand what F. B. wishes to disprove: he would seem to say that scalariform vessels, by being *characteristic* of the higher division of acotyledons, *i.e.*, ferns and their allies, are *confined* to them, therefore that they do not occur in dicotyledons, and that therefore M. H. F. is wrong in saying that the diffusion of the azotized combinations take place through them.

"I may be wrong in my inference, but I need hardly say that, if this is what F. B. means, he is totally wrong.

"In the very work from which he quotes (Balfour's Manual), the illustration of a scalariform vessel is taken from a vine.

"If F. B. wants proof, I will refer him to Seubert, p. 121, fig. 420:—'Portion of a *dicotyledonous* vascular bundle—*a.* retiform; *b.* scalariform vessels.' Again, p. 128:—'Phanerogamous plants, in general, are distinguished by the presence of vessels and vascular bundles. Among cryptogamous plants, however, *only ferns and their allies are similarly characterized*, and are on that account designated vascular cryptogams.' Again, in speaking of dicotyledonous plants:—'The nitrogenous plastic combinations are contained in the liber, and principally in its retiform and scalariform vessels . . . . . while the diffusion of the non-azotized nutritive substances takes

place in the parenchymatic tissue both of the bark and the stem.'

"Robert Bentley says, p. 49:—'These vessels (scalariform) are sometimes cylindrical tubes like the other kinds, as in the vine (fig. 106) and many other dicotyledonous plants, in which condition they are but slight modifications of reticulated vessels; but in their most perfect state, scalariform vessels assume a prismatic form as in ferns (fig. 105) *of which they are then specially characteristic.*'

"These I hope are sufficient to prove that scalariform vessels do exist in dicotyledonous plants as well as in ferns.

"I fail also to see anything misleading in the term 'hydrocarbon' which is, I suppose, what F. B. means when he writes 'hyrocarbon,' unless it be a clerical error. F. B. accuses M. H. F. of speaking 'loosely,' a criticism in which I cannot agree, but he himself places resins, excreta, as they may be called, in the same category with gums and starches, the assimilated combinations of C. H. O. (if this be 'admissible') actively concerned in nutrition.

"Nor does there seem to me anything in M. H. F.'s explanation which would lead one to suppose that he was under the impression that these were 'pumped out of the earth in a pure state.'"

R. W.

RANGOON, *July 8th*, 1876.

Budget Headings.

IT appears to me to be a mistake to put the expenditure incurred in re-stocking bare tracts under A. IV.—1. *Cost of Creation of Natural Forests.*—If the restoration of denuded areas is not considered sufficiently artificial to bring it under A. IV.—2, it is scarcely necessary to have a special sub-division for the cost of the creation of artificially formed forests, as the re-stocking of denuded areas is essentially an artificial process. The item comes naturally under A. IV.—2 (*a*). *Formation of Artifical Forests* (or, more properly speaking, artificial formation of forests); but if it is necessary to distinguish between the

re-stocking of waste which has been denuded of trees within the memory of man, and that which has been bare for a longer period, it should come under A. IV.—2 *(e)* re-stocking of denuded areas.

JANGALI BULBUL.

Exchange of Seeds, &c.

IT appears to me that it would be as good plan to use this journal as a means of advertisement between Forest Officers for the interchange of seeds, &c. If Forest Officers in different parts of India and Burma would publish lists of any specialities in the way of seeds, &c., available from the districts, much useful dissemination might result. I am most anxious to procure seed of any of the Himalayan or Burmese bamboos for trial in our different forests, also Himalayan and Sikkim primula seed for the Botanical Gardens at Ootacamund, &c., and bulbs of all liliaceous plants, terrestrial orchids, &c. In return I can offer seed of South Indian bamboos or any forest trees figured in the Flora Sylvatica of South India. Parcels of this nature can always be sent on *Service*.

R. H. BEDDOME, *Lieut.-Col.*,
Consr. of Forests, Madras.

OOTACAMUND, 29*th June* 1876.

Kurz's Burma Flora and other Books.

A Query.

DEAR SIR,—What has become of Mr. Kurz's Burma Flora? Long ago the "introduction" full of facts of the highest interest to the forester, and of a character superior to most of the literature officially circulated, was in print, and it was hoped would be circulated in a separate form. We do not get too many books of reference as a rule. No copies of Mr. Brandis' Flora have (as far as I know) been made available for official use, which is strange after the special deputation of two officers to Europe for more than three years for the purpose of preparing a book for foresters. Copies also of Messrs. Smythies' and Fer-

nandez' translation of Bagneris' Sylviculture seem equally unattainable. Why is this?

Yours truly,
ENQUIRER.

In answer to the above query we can state that Kurz's Preliminary Report on the Forest and other Vegetation of Pegu has just been circulated by Government.

Messrs. Fernandez' and Smythies' translation of Bagneris' Sylviculture has not been circulated, owing, we believe, to the fact that by an oversight too few copies were struck off.

Why, *of all books*, Dr. Brandis' Forest Flora has not been circulated for official use is indeed difficult to understand.

THE EDITOR.

On Mr. Amery's Paper. "The Special Survey Branch."

TO THE EDITOR OF THE "INDIAN FORESTER."

SIR,—When writing the remarks on Mr. Amery's paper, "the Special Survey Branch," I was not aware that topographical details formed part of Captain Bailey's programme; since then, however, I have received Dr. Brandis' report on the administration of the forests for 1873-74. From this report it appears that in the year under review all interior details of the survey were taken up, but that subsequently anything beyond boundary lines were excluded on the score of expense. I can now more easily understand Mr. Amery's assertion that maps on the 1-inch scale could be made for a quarter of the cost of maps on the 4 and 8-inch scales. Although it apparently follows that if the 1-inch scale is cheaper than the 4-inch, the 4-inch is also cheaper than the 8-inch, it appears probable that the difference in cost between maps on the 4 and 8-inch scales is very small. If such be the case, it is worth while to consider, whether it would not be better to have all *original* maps made on a larger scale than the present one, which, if doubled, would be much less than half the largest scale adopted for similar purposes on the Continent. Assuming that distances of 1-50th of an inch only can be shewn on maps, the present scale

would only shew measurements over 26 feet in length; this degree of accuracy may suffice for present requirements;' but, as time goes on and the forests increase in value, more accurate maps may become necessary, and for this reason alone, assuming that expenses are not greatly increased, it might be as well to make original maps on the 8 or, better still, the 12-inch scale for the future; the latter is nearly as large as the smallest scale used on the Continent; which is 13½-inches to the mile, nearly. In any case it would be desirable to make and record accurately all field-measurements, so as to obviate, as far as possible, the necessity of re-surveys.

Yours faithfully,
JANGALI BULBUL.

Kad Handi's Paper on 'Castilloa Elastica and the Western Ghaut Forests', page 57 of Vol. II, No. I of "Indian Forester."

KAD HANDI'S paper is a cheerful one as you remark in your note, but his experience of the eastern districts of Mysore is evidently limited. Trees of large dimensions are far from uncommon in many of the talukhs east of Bangalore, and the care which is now being bestowed on the trees planted in the departmental plantations will result in much more than keeping up appearances. K. H. is right in saying that trees will grow to a great size in the western districts, and their annual increment is greater than in the drier east; but in the west we have a plethora of trees, many inaccessible localities, great difficulties of transport, expensive labour and a scanty population. In the east we have a far denser population, good roads, cheap labour, and few trees.

The plantations were not formed with the view of supplying the Mysore State Railway (when it is made), but with the object of aiding the supply of the Madras Railway, the *western* terminus of which is at Bangalore (on the branch line); and also to supply fuel and small wood to the town of Bangalore. The Mysore State Railway, if ever built, will have one termi-

nus at Bangalore, the other at Mysore, which latter place is a long way from the Western Ghauts.

K. H.'s opinion that the eastern forests are in no way as valuable as those farther west, will perhaps be modified as years go on. In wealth of wood and in variety of species, they are far inferior to those in the Ghauts, but placed where they are in the midst of dry plains, these small forests lying among clusters of hills have an economic value which justifies all that is, or will be shortly, spent on them. Perhaps it would be well if all of us took more care of these poor-looking forests in the plains, than we are apt to do, being tempted by the fine growth among hills to overlook the smaller growth in the plains.

Kad Handi would find by the time that he slid his Western Ghaut's wood *down* his slides, sawn it up with a 'cheap' (?) water-power saw-mill, and carried it *up* again by the Ghaut roads, that the price he would have to put on it would send his limited market to the poorer but far cheaper wood from the deciduous forests of Mysore and East Coorg.

It is an interesting fact that the Deputy Commissioner of the Bangalore district, some time ago, sold an old mango tree *east* of Bangalore, for the sum of Rs. 600; the tree to be felled and removed by the purchaser.

PLATEAU.

7th September 1876.

"Copse and Coppice."

SIR,—In Vol. I, No. III of the *Forester*, p. 291, it is said that the word "copse" should only be used as a verb, and not in the sense of "coppice."

As far as ordinary language is concerned, "copse" and "coppice" are both *substantives*, and are correct English forms. I presume however that usage permits us to use either as a verb, in an intransitive sense as in the phrase,—"Such and such a tree coppices well." In this form it appears to me more correct to say "coppices" than "copses well;" though perhaps on the authority of the somewhat analogous *form* of "practice" and

"practise," the *s* ought to go to the verb, and the *c* to the sub stantive.

Could we use the active verb, *e.g.* "I intend to coppice (or copse?) 40 acres this season"?

Yours obediently,
B. H. B.-P.

Jangali Bulbul's Paper on 'Technical Terms' at page 48 of "Indian Forester" for July 1876.

TO THE EDITOR OF THE "INDIAN FORESTER."

I HAVE not had the advantage of a forest training, and shall not therefore pretend to enter the lists against either Mr. Smythies or Jangali Bulbul, but I simply enter a plea for English words and terms comprehensible to all of us, and to the Revenue Officers with whom we have to work so closely; Secretaries review our proceedings as reported by us, so do not let us give them any but English words.

I think Mr. Smythies, at page 285 of *Indian Forester* for January 1876, gives us very good reasons for keeping to *working plan*. But O Bulbul, I ask you if *exploitation plan* sounds sweetly even when pronounced by you? You yourself write of it as "felling or exploitation plan." Keep to the "felling" even if it is not able to express all you mean. We can but hear what our ears hear. They are not trained to *exploitation plan*, and it will ever grate on them.

I would sing second to Bulbul's first when he asks for *leaf-cover* instead of *leaf-canopy*. But *exploitability*? Oh dear! somebody will be wanting *exploitabilitiness* next.

Then as *leaf-tree* is intelligible to us, I would suggest to Jangali Bulbul that we be absurd and keep to it.

Instead of *series*, would not *cutting* do? Mr. Smythies' observations on page 288 of *Indian Forester* for January 1876, suggest this word to me.

Ideal forest is, I think, preferable to *normal forest*, till we get a forest of the kind, when of course *normal* will become the proper term.

Would not *wood* do instead of *barren wood*, retaining Bulbul's definition of *timber*. Perhaps *other wood* would do.

In fence is not bad, but you know that may mean that it is not "good."

I do not understand *station* at all.

INDOCTUS.

7th September 1876.

Technical terms.

SIR,—In reply to your note at page 49, Vol. II. of the *Forester*, I beg leave to say that if I understand the word *Wirthschaftsbezirk* (of which the English word *working-circle* is evidently a translation) aright, it has nothing whatever to do with the area over which our working-plan extends. It refers simply to the charge of a controlling officer whose rank corresponds to that of a Deputy Conservator, although here in India the duties of a Deputy Conservator are partly executive and partly controlling. A working-circle must, therefore, contain not only the area over which one working-plan extends, but that over which many extend.* In this word the prefix *working* is superfluous.

The definition given of a *block* was "the area over which one working-plan extends."

The definition given for *barren wood* in the same paper should have been "all wood not used as timber or firewood," instead of "all wood not timber."

JANGALI BULBUL.

5th September 1876.

---

* A "working circle" must contain, what we agree on, which I propose to be the area over which one working-plan extends.—THE EDITOR.

IV. SHIKAR AND TRAVEL.

Forest Travel in Canada.

THE following excerpt from a letter of an Indian Forest Officer now in Canada may be interesting :—

After a stormy passage across the Altantic our correspondent found himself in the Gulf of St. Lawrence, which formed one sea of ice, and slow progress, literally "ploughing the azure main," through ice masses, was made over 180 miles in three days and a half.

The St. Lawrence river is 45 miles wide at the entrance, the whole country on each side being covered with snow (this was the end of April) and clothed with dense pine and oak forests down to the water's edge.

Quebec was reached on the 1st of May, and is described as one of "the vilest places" ever set foot on.

The railway thence to Toronto passes through country which seems to be "in ruins." This appearance is due to the innumerable charred pine stumps and the rough irregular tumble-down fences round the settler's clearings, added to which thousands of acres of half burnt forest present a desolate spectacle.

The destruction of forests and timber, it is said, are something awful. We talk of "inexhaustible supplies," but unless Government introduces a system ot conservancy, the whole country will be denuded of trees. Fires destroy thousands of acres annually.

The whole of the district of Muskoka, which our corespondent supposes to be one of the finest wooded quarters on the globe, is made over to "Lumber Companies" who fell every tree without any restriction or supervision whatever. The land is termed "free grant land," but belongs to Government, and settlers are allowed to take from it what they want for domestic purposes.

"You ought to see," writes our correspondent, "the backwoodsmen handling an axe. I was out a few days ago looking at the felling, logging, and rafting. I measured a pine which was 6′ 8″ in girth. A big brawny fellow took his axe and felled the tree in 10½ minutes; and cut one log ten feet from the stump end in 3 minutes. They work in gangs of 3 axes and one cross-cut saw, and average 70 logs a day throughout the season; each log is cross cut at both ends." A length of four feet has to be cut off the stump end of every tree after it is felled. Though this seems to be the best part of the timber, the lumber men say it is useless and call it "the shake" on account of its being so much wrenched and shaken just as it is beginning to part with the stump and fall.

Strange Behaviour of a Tiger.

From "The Field."

SIR,—The following account of the proceedings of a tiger may interest some of your readers. The occurrence happened at the Corranna tea plantation, in the district of Durrung, Assam, on the 18th September 1873:—On the afternoon of that day an elephant, with her mahout and grass-cutter, were sent out to the jungle to bring in some "nul" (a kind of reed much used for making mats, &c.) About four o'clock in the afternoon, having secured the elephant by hobbling her fore-legs with a rope, the men set to work to cut the "nul," and were so engaged when a tiger sprang out and killed the grass-cutter. The mahout ran straight for the garden (some three miles off), leaving his elephant in the jungle. The place where this happened was on the bank of a water-course, near a footpath leading to the garden, through grass jungle, about eight feet high, and quite impenetrable to anything but a wild animal or an elephant. The mahout took the path, and reached the garden in safety. About one o'clock next morning, it being pitch dark at the time, the tiger came into the garden and broke into the fowl-house, killing everything it contained: this being, as far as I can remember, one goat, six or eight ducks, twenty-

two fowls, and one goose. The walls of the houses in the garden afford very little resistance to a tiger determined to get in, as they are all made of reeds tied between split bamboos, and supported by wooden posts driven into the ground. Having settled the fowls, the tiger, roaring furiously, walked round the cook-house, in which some of the servants were sleepin but did not break into it. He then went off for the tea-house, part of which was an open shed, with wall about 4ft. high. He jumped over this wall, and landed on some zinc sheeting, which is used for sorting tea upon. The noise his feet made on this appears to have alarmed him somewhat, for, although there were some coolies sleeping in the shed, he retreated without doing any mischief. He now went down the road to the coolie lines, where he commenced operations by killing a pony. He next broke into a house and killed an old woman, and then into another, where he killed a boy. By this time the alarm had been thoroughly given, and the coolies (Kacharees) had all turned out, armed with sticks, "dhaos," or anything they could lay their hands on. They had assembled in a band, blazing torches of dried grass, shouting and yelling, to drive the tiger off; but the brute charged right into the midst of them, and was not driven off till he had killed or mauled nine men. So far as I can learn, the coolies defended themselves to the best of their power, and used their sticks freely on the tiger, who then went off, and was never again seen or heard of. Pursuit would have been hopeless, for at that season of the year the garden was surrounded by many miles of grass jungle, such as I have before described.

The European manager was absent at the time, so that I have given the facts as I received them from the natives; but the accuracy of their statements is not to be doubted, for the dead and wounded, unfortunately, remained as undeniable witnesses. Two of the twelve sufferers alone survived their wounds.

The case was investigated by the authorities, as is usual in India when human life has been taken by wild animals; and a history of it will be found among the records of the Assam Commission.

The elephant was recovered near the place where the grass-cutter had been killed, and the body of the latter was also found there by the police two days after the occurrence, as the tiger did not eat any of the men or animals killed by him on that occasion.

I should like much to know if any of your correspondents have known of a similar incident, and how they would account for this tiger behaving in such an unusual manner. There were two theories started in the district at the time: one was that it was a tigress with cubs, upon whose den the mahout and his unfortunate mate had unwittingly intruded. But I am not inclined to agree with this; for, had it been so, I think the tigress would have been satisfied with killing the one man and driving off the other, and would not have travelled three miles away from her cubs to wreak further vengeance. The other theory was that it was a tiger which had been fighting or been wounded by a shikaree, and had gone mad from the pain of his wounds, which would be fearfully irritated by the deposits of the numerous flies. I am inclined to believe in this latter theory, and think that the infuriated beast, after killing the grass-cutter, had tracked up the mahout by scent, and so found out the garden. It would have been difficult for him to have found it otherwise, unless by accident, in the midst of such an extensive jungle. My opinion is that the tiger must have followed the mahout almost immediately, and that he was prowling about amongst the tea-bushes, or in the adjoining jungle, during the whole of the early part of the night, unable to make up his mind for the attack. The fowl-house stood on the edge of a ravine, filled with grass and other jungle, which intersected the tea cultivation, and I think that he must have sneaked up this ravine, and so found out the fowl-house. Had he not unfortunately got in there, and had his ferocity further excited by the blood of the animals, I think it is possible that he would have retired before daybreak, without doing the mischief which he ultimately did.

J. O. Logan.

The Gentle Bheel.

A Conference Poem.

I.

(H.) I keenly feel that every Bheel
Should have his wood and water free,
That with his axe, and ne'er a tax
He may take every forest tree.

II.

(W.) But one may steal, tho' not a Bheel.
(H.) Yes, true! but here's my dodge so neat,
I hang a ticket round his neck
Or brand him (gently but complete.)

III.

(W.) Then with a squeal that branded Bheel
Would make the forest tribute pay,
Tree-bush and shrub, root stem and twig,
He'll fell; then where your forest (?) say!

IV.

(H.) The hungry Bheel must have a meal,
So out of trees I'll pick out nine,
And say "my Bheel *that* list is yours,
And *this* my gentle Bheel is mine."

V.

And lest that Bheel again should steal,
—I'd teach him manners, give him fields;
A college, schools, both high and low,
Good roads, and all that science yields.

VI.

(W.) I also feel, I love the Bheel,
But with your plan I disagree!!
I'd shut up every forest tract
And never let him see a tree.

VII.

But as that Bheel *must* have a meal,
On *prickly pear* I would him feed;
And seat him on the cactus top,
If *moral suasion* he should need,

VIII.

And as the Bheel the want might feel
  Of clothes, I'd take a haversack
And fill it up with seeds of kinds,
  And place it gently on his back.

IX.

And o'er the hills, so void of rills,
  That Bheel the seed should broadcast sow;
Thus trees would rise before our eyes
  And springs would gush and fountains flow.

X.

Then looking down the stream of time
  With mental eye like Dollinger,
I see the Bheel, opuntia fed,
  Will bless the name of W—ll—nger.

V. Extracts from Official Gazettes and from other Official Publications.

1.—Gazette of India—

The 5th April 1876.—No. 296.—The following gentlemen, appointed by Her Majesty's Secretary of State to the Forest Department of India, are posted to that Department as Assistant Conservators of Forests of the 3rd grade. The Provinces to which they are attached, and the dates from which their appointments will have effect, are mentioned opposite their names:—

Mr. W. E. D'Arcy,	Assam,	4th	January	1876.
„ A. J. Mein,	„	8th	„	„
„ E. G. Chester,	Bengal,	12th	„	„
„ P. J. Carter,	Burma,	19th	„	„
„ F. B. Manson,	Bengal,	26th	„	„
„ J. Nisbett,	Burma,	26th	„	„
„ F. H. Bonham Carter,	Bengal,	11th	March	„

The 5th June 1876.—No. 460.—*Mr. B. H. Baden-Powell* having returned from furlough, and resumed charge of the office of Conservator of Forests in the Punjab on the 21st April last, *Lieutenant-Colonel W. Stenhouse* reverted from that date to his substantive appointment of Deputy Conservator of Forests, but will continue to be employed in the Punjab.

The 6th June 1876.—No. 464.—*Messrs. A. T. Drysdale and G. Mann*, Officiating Deputy Conservators of Forests of the 3rd grade in the Berars and Assam, respectively, are confirmed in their appointments.

The 5th July 1876.—No. 568.—With reference to paragraph 7 of the Resolution of the Government of India in this Department, No. 20—857—873, dated the 3rd August 1875, *Mr. J. T. Jellicoe*, Assistant Conservator

of Forests of the 2nd grade in Mysore, is attached to the Forest Survey Department for a period of 12 months.

Mr. Jellicoe joined that Department on the 12th ultimo.

The 15th August 1876.—No. 763.—With the consent of the Government of the North-Western Provinces, *Mr. C. W. Palmer*, Sub-Assistant Conservator of Forests in those Provinces, is transferred to British Burma.

Mr. Palmer reported his arrival at Rangoon on the forenoon of the 26th May last.

The 19th August 1876.—No. 796.—The leave of absence for 18 months granted by the Chief Commissioner of Mysore to *Mr. J. Macpherson*, Assistant Conservator of Forests of the 1st grade, under section 9, supplement F, of the Civil Leave Code, with effect from the 5th February 1875, and which will expire on the 5th August 1876, is extended to the 15th December 1876.

The 24th August 1876.—No. 814.—*Mr. A. L. Home*, Deputy Conservator of Forests of the 2nd grade in Bengal, whose services have been placed at the disposal of the Government of India, is appointed Assistant to the Inspector-General of Forests as a temporary measure.

Mr. Home joined his appointment on the forenoon of the 22nd instant.

The 30th August 1876.—No. 846.—With the consent of the Government of the Punjab, and with reference to paragraph 7 of the Resolution of the Government of India in this Department, No. 20—857—873, dated the 3rd August 1875, *Mr. A. Stewart*, Sub-Assistant Conservator of Forests in the Punjab, is attached to the Forest Survey Department for a period of 12 months.

Mr. Stewart joined that Department on the 22nd ultimo.

The 8th September 1876.—No. 893.—The following Officers are promoted with effect from the 1st May 1876:—

To be Assistant Conservators of Forests of the 3rd Grade.

Mr. J. Ballantyne,	Sub-Asst.	Conservr.	of Forests,	Hyderabad.
„ G. Richardson,	„	„	„	Bengal.
„ W. King,	„	„	„	Mysore.
„ O. Greig,	„	„	„	N.-W. P.

To officiate as Assistant Conservators of the 3rd Grade.

Mr. H. R. Ring,	Sub-Asst.	Conservr.	of Forests,	Coorg.
„ E. Dobbs,	„	„	„	Cn. Provinces.
„ C. W. Palmer,	„	„	„	Bsh. Burma.
„ E. Fendall,	„	„	„	Punjab.
„ A. Stewart,	„	„	„	Punjab (attached temporarily to the Forest Survey Branch).

His Excellency in Council has also been pleased to appoint *Mr. E. F. Litchfield*, an Assistant Surveyor of the 2nd grade in the Great Trigonometrical Survey, to officiate as a Sub-Assistant Conservator of Forests from this date, and to attach him to the Survey Branch of the Forest Department.

The 15*th September* 1876.—No. 951.—*Mr. H. B. Condon*, Sub-Assistant Conservator of Forests in Assam, has been granted leave of absence to Europe on medical certificate for fifteen months from the 3rd February 1876, together with subsidiary leave from the 4th January to the 2nd February 1876, both days inclusive.

2.—CALCUTTA GAZETTE—

The 18*th May* 1876.—*Mr. E. Fuchs*, Assistant Conservator of Forests, Buxa Sub-Division, is allowed leave for seventy-five days, with effect from the 20th instant, or any subsequent date on which he may avail himself of it.

The 24*th June* 1876.—The services of *Mr. A. L. Home*, Deputy Conservator of Forests, are temporarily placed at the disposal of the Government of India, in the Department of Revenue, Agriculture, and Commerce.

The 30*th June* 1876.—*Mr. H. H. Davis*, 2nd grade, Assistant Conservator of Forests, is appointed to officiate in the 1st grade of Assistant Conservators, with effect from the 1st April last.

Mr. W. Jacob, Deputy Conservator of Forests, whose services have been placed at the disposal of this Government, is appointed to the charge of the Sunderbuns Forest Division.

The 25th August 1876.—*Mr. J. C. McDonell*, Assistant Conservator of the 1st grade, is appointed to act in the 3rd grade of Deputy Conservator, with effect from the 3rd May 1876.

The 29th August 1876.—*Mr. H. H. Davis*, Assistant Conservator of Forests, Chittagong Division, is allowed leave of absence for three months under section 22, chapter VI, of the Civil Leave Code.

The 22nd September 1876.—With the approval of His Excellency the Governor-General in Council, Mr. *Johnston*, Assistant Conservator of Forests, 3rd grade, is promoted to the 2nd grade of Assistant Conservatois, with effect from the 27th August 1876.

3.—North-Western Provinces Gazette—

The 29th March 1876.—No. 143F.—*Mr. C. W. Palmer*, Sub-Assistant Conservator, returned on the forenoon of the 20th ultimo from the two months' privilege leave granted to him in Notification No. 297F, dated 14th December 1875.

The 6th April 1876.—No. 148F.—The leave on private affairs for six months granted to *Mr. A. Pengelly*, Assistant Conservator of Forests, in Notification No. 80F, dated 29th February last, is hereby cancelled.

The 22nd April 1876.—No. 175F.—*Mr. R. P. Colvin*, Deputy Conservator of Forests, 1st grade, reported his return from the leave granted to him in Notification No. 120F-C, dated 14th August 1874, on the forenoon of the 15th instant.

No. 176F.—Consequent on the return to duty of *Mr. R. P. Colvin* from furlough, the following changes will take place:—

Mr. R. P. Colvin, Deputy Conservator, 1st grade, will resume charge of the Garhwal Division.

Mr. C. F. Amery, Deputy Conservator, 3rd grade, on being relieved by *Mr. Colvin*, will take charge of the Bhágirathi Division from *Mr. I. E. O'Callaghan*, Officiating Deputy Conservator, 1st grade.

No. 177F.—With reference to Government of India, Notification No. 282, dated 30th March 1876, Department of Revenue, Agriculture, and Commerce, *Mr. G. Greig*, Officiating Conservator of Forests, North-Western Provinces, is granted the usual preparatory leave, with effect from the 1st May 1876.

No. 178F.—Consequent on the departure of *Mr. G. Greig*, Officiating Conservator of Forests on leave, the following changes will take place :—

Captain J. Campbell, Officiating Assistant Conservator, 1st grade, Kumaun Division, to assume charge of the Ránikhet Sub-Division in addition to his other duties.

Mr. A. Pengelly, Officiating Assistant Conservator, 1st grade, from the Ránikhet Sub-Division to the Dehra Dún Division, *vice Mr. I. E. O'Callaghan*, who will officiate as Conservator of Forests.

The 28th April 1876.—No. 186F.—With reference to Notification No. 78F, dated 22nd February last, the following changes are made :—

Mr. A. W. Rind, Assistant Conservator, 2nd grade, to the charge of the Jaunsár Division.

Mr. E. P. Dansey, Assistant Conservator, 2nd grade, is transferred from Garhwál to the Jaunsár Division.

The 10th May 1876.—No. 10F-C.—Privilege leave for one month is granted to *Mr. C. F. Amery*, Deputy Convator, 2nd grade, with effect from the date on which he is relieved of the charge of the Garhwál Division.

The 13th May 1876.—No. 191F.—With reference to Notification No. 282, dated 30th March 1876, Department of Revenue, Agriculture, and Commerce, *Mr. G. Greig*, Officiating Conservator, and *Mr. I. E. O'Callaghan*, Deputy Conservator, respectively, made over and received charge of the office of Conservator of Forests on the afternoon of the 3rd instant.

The 19th May 1876.—No. 199F.—With reference to Notification No. 186F, dated 28th April 1876, *Messrs. C. Bagshawe*, Assistant Conservator, 1st grade, and *L. A. W. Rind*, Assistant Conservator, 2nd grade, respect-

ively, made over and received charge of the Jaunsár Division on the afternoon of the 2nd instant, *Mr. E. P. Dansey*, Assistant Conservator, 2nd grade, joined the Jaunsár Division on the forenoon of the 30th ultimo.

No. 200F.—*Mr. C. Bagshawe*, Assistant Conservator, 1st grade, availed himself on the 3rd instant of the leave granted to him in Notification No. 78F, dated 22nd February 1876.

The 26th May 1876.—No. 205F.—With reference to Notification No. 176F, dated 22nd April 1876, *Messrs. C. F. Amery*, Deputy Conservator, 2nd grade, and *R. P. Colvin*, Deputy Conservator, 1st grade, respectively, made over and received charge of the Garhwál Forest Division on the forenoon of the 9th instant.

The 3rd June 1876.—No. 22F-C.—The following promotion is made in the Forest Department :—

Name.	Present Grade.	Grade to which promoted.	With effect from	Nature of Promotion.	REMARKS.
Grant, A. R.	Asst. Conservator, 2nd grade.	Asst. Conservator, 1st grade.	3rd May 1876.	Temporary.	*Vice* Mr. Bagshawe, on furlough.

The 5th June 1876.—No. 211F.—With reference to Notification No. 177F, dated 22nd April 1876, *Mr. G. Greig*, Officiating Conservator of Forests, availed himself on the 4th ultimo of the leave granted to him, and sailed from Bombay for Europe on the 8th idem.

No. 212F.—Under orders of the Government of India, *Mr. C. W. Palmer*, Sub-Assistant Conservator of Forests, is transferred from the North-Western Provinces to British Burma. *Mr. Palmer* was relieved of the charge of the Jaunsár Division, by *Mr. E. P. Dansey*, Assistant Conservator, 2nd grade, on the forenoon of the 6th May 1876.

No. 213F.—The one month's privilege leave granted to *Mr. C. F. Amery*, Deputy Conservator, 2nd grade, in Notification No. 10F-C, dated 10th May 1876, is hereby cancelled.

No. 214F.—With reference to Notification No. 78F, dated 22nd February 1876, *Mr. C. Bagshawe*, Assistant Conservator of Forests, 1st grade, sailed from Bombay on the 8th May 1876.

The 21st June 1876.—No. 45F-C.—With reference to Notifications Nos. 198F-C and 88F, dated respectively the 9th October 1874, and 23rd March 1875, *Mr. W. Brereton* officiated as Deputy Conservator, 3rd grade, up to 6th April 1875, from which date *Captain J. E. Campbell* will continue to officiate as Assistant Conservator, 1st grade, during *Mr. Brereton's* absence on leave, or until further orders.

No. 46F-C.—With reference to Notification No. 205F, dated 26th ultimo, the following officer reverted to his substantive appointment on the 9th idem, the date on which *Mr. R. P. Colvin*, Deputy Conservator, 1st grade, returned from leave:—

Mr. I. E. O'Callaghan to Deputy Conservator, 2nd grade.

The 27th June 1876.—No. 54F-C.—Leave on medical certificate for one year is granted to *Shaik Muhi-ud-dín*, Sub-Assistant Conservator, with effect from the 22nd January 1876.

The three months' privilege leave granted to this officer in Notification No. 93F, dated 10th March 1876, is hereby cancelled.

The 29th June 1876.—No. 234F.—With reference to Notification No. 178F, dated 22nd April 1876, *Mr. A. Pengelly* and *Captain J. E. Campbell*, Officiating Assistant Conservators, 1st grade, respectively, made over and received charge of the Ránikhet Sub-Division on the afternoon of the 17th instant.

The 3rd July 1876.—No. 237F.—With reference to Notification No. 178F, dated 22nd April 1876, *Mr. I. E. O'Callaghan*, Deputy Conservator of Forests, 2nd

grade, and *Mr. A. Pengelly*, Assistant Conservator, 1st grade, respectively, made over and received charge of the Dehra Dún Division on the afternoon of the 24th ultimo.

The 10th July 1876.—No. 241F.—With reference to Notification No. 176F, dated 22nd April 1876, *Mr. I. E. O'Callaghan*, Deputy Conservator, 1st grade, and *Mr. C. F. Amery*, Deputy Conservator, 2nd grade, respectively, made over and received charge of the Bhágirathi Forest Division on the forenoon of the 29th May 1876.

The 4th September 1876.—No. 280F.—In supersession of Notification No. 34F, dated 22nd January 1876, leave on medical certificate for three months is granted to *Mr. R. P. Colvin*, Deputy Conservator of Forests, 1st grade, in addition to the leave granted in Notification No. 287F, dated 2nd December 1875.

No. 281F.—Subsidiary leave for 26 days, from 13th April to 8th May 1876 (both days inclusive), is granted to *Mr. R. P. Colvin*, Deputy Conservator of Forests, 1st grade, to enable him to rejoin his appointment.

4.—PUNJAB GAZETTE—

The 24th April 1876.—No. 106F.—*Notification.—Mr. B. H. Baden-Powell*, Conservator of Forests, Punjab, reported his arrival at Bombay on the 12th April 1876, on return from the furlough granted to him in *Punjab Government Gazette*, Order No. 147F., dated 15th April 1874.

The 20th June 1876.—No. 149.—*Promotion.*—With the sanction of the Government of India, *Lieutenant-Colonel W. Stenhouse*, Deputy Conservator of Forests, 2nd grade, is promoted to Deputy Conservator, 1st grade, with effect from the 17th March 1876, *vice Captain W. Douglas*, deceased.

No. 150.—*Appointment.*—With the sanction of the Government of India, *Mr. E. Sparling*, Assistant Conservator of Forests, 1st grade, is appointed to officiate as Deputy Conservator, 3rd grade, with effect from the 8th February 1876.

The 24th July 1876.—No. 205.—*Reduction.—Mr. F. O. Lemarchand*, Assistant Conservator of Forests, is reduced from the 2nd to the 3rd grade.

5.—OUDH GAZETTE, *None.*—

6.—CENTRAL PROVINCES GAZETTE—

The 29th March 1876.—No. 1174—Three months' privilege leave of absence is granted to *Mr. J. Makee*, Assistant Conservator of Forests, from the 1st April next, or the subsequent date on which he may avail himself of it.

The 30th March 1876.—No. 1201.—*Mr. Leeds*, Deputy Conservator of Forests, availed himself of the sick leave granted to him by Government of India Notification No. 926, dated 15th instant, on the same date.

The 5th April 1876.—No. 1266.—*Mr. J. Makee*, Assistant Conservator of Forests, availed himself of the three months' privilege leave granted to him by Notification No. 1174, dated 29th ultimo, on the 1st instant.

The 2nd July 1876.—No. 2725.—*Mr. W. Jacob*, Deputy Conservator of Forests, under orders for Bengal, made over charge of the Central Division to *Mr. J. Mackee*, Assistant Conservator of Forests, on the 8th instant.

No. 2726.—*Mr. J. Makee*, Assistant Conservator of Forests, returned from the privilege leave granted to him by Notification No. 1174, dated 29th March last, and assumed charge of his duties on the 1st instant.

The 18th August 1876.—No. 3190.—*Messrs. E. E. Fernandez* and *A. Smythies*, Assistant Conservators of Forests, 3rd grade, are, under instructions from the Government of India, promoted to the 2nd grade, with effect from the 12th April 1876 and 6th July 1876, respectively.

7.—BRITISH BURMA GAZETTE—

The 21st April 1876.—No. 68.—The following gentlemen, appointed by the Secretary of State to the Forest Department, joined their respective appointments in this province on the dates noted opposite their names:—

Mr. P. J. Carter	...	19th January 1876.
„ J. Nisbett	...	26th „ „

The 25th May 1876.—No. 79.—*Mr. E. P. Popert*, Assistant Conservator of Forests, 2nd grade, assumed charge of the Eastern and Western Prome Divisions on the 12th April 1876.

The 7th June 1876.—No. 87.—*M. C. W. Palmer*, Sub-Assistant Conservator of Forests, reported his arrival in Rangoon on the morning of the 26th ultimo, and is posted to the Prome Division.

The 15th June 1876.—No. 95.—Under the provisions of section 18 *(a)* of the Civil Leave Code, *Mr. G. W. Strettell*, Deputy Conservator of Forests, 2nd grade, is granted thirty days' subsidiary leave, preparatory to proceeding on two years' furlough to Europe.

No. 96.—In supersession of Revenue Department Notification No. 14, dated the 2nd February 1876, published at page 18 of part II of the *British Burma Gazette* of the 8th idem, *Mr. G. W. Strettell*, Deputy Conservator of Forests, 2nd grade, is granted two years' furlough to Europe, under the provisions of section 10 (*a*) of the Civil Leave Code, from such date as he may avail himself of the same.

The 4th July 1876.—No. 105.—With reference to Revenue Department Notification No. 107, dated the 14th October 1875, published at part II, page 196 of the *British Burma Gazette*, dated the 16th idem, *M. A. E. Wild*, Assistant Conservator of Forests, 2nd (officiating 1st) grade, is confirmed in the latter grade as a temporary arrangement.

The 2nd August 1876.—No. 168.—*Mr. M. H. Ferrars, B.A.*, Assistant Conservator of Forests, British Burma, is appointed to officiate as Inspector of Schools during the absence on leave of *Mr. A. H. Unwin*, or until further orders.

The 10th August 1876.—No. 121.—*Mr. C. W. Palmer*, Sub-Assistant Conservator of Forests, assumed charge of the Western Prome Forest Division, on the afternoon of the 21st July 1876.

The 28th August 1876.—No. 131.—*Mr. R. Whittall,* Assistant Conservator of Forests, assumed charge of the Rangoon Forest Division on the afternoon of the 27th ultimo.

8.—ASSAM GAZETTE—

The 29th April 1876.—Leave of absence for fifteen months on medical certificate to Europe, under section 3, supplement F of the Civil Leave Code, is granted to *Mr. H. B. Condon,* Sub-Assistant-Conservator of Forests, in commutation of the privilege leave for three months granted to him in orders dated the 15th December 1875.

9.—BOMBAY GAZETTE—

The 21st April 1876.—The promotion of *Mr. J. Laird* to the 2nd grade of Assistant Conservator of Forests, is to have effect from the 7th October 1872.

The 25th April 1876.—*Mr. T. B. Fry,* Assistant Conservator of Forests, 3rd grade, and the District Forest Officer, Northern Circle, was allowed Examination leave from the 8th to the 11th April, both days inclusive.

The 10th May 1876.—*Mr. T. B. Fry,* Assistant Conservator of Forests, 3rd grade, is promoted to the 2nd grade, with effect from the 12th ultimo.

The 23rd May 1876.—*Mr. G. A. Gibson,* District Forest Officer of Tanná, has been allowed privilege leave of absence for three months, from the 25th ultimo.

The 5th June 1876.—*Messrs. P. F. Fernandes,* Sub-Assistant Conservator of Forests, Kanara, and *H. Barrett,* Deputy Conservator of Forests, Kanara, delivered over and assumed charge of the office of the Sub-Assistant Conservator of Forests, Kanara, on the 31st May 1876, after office hours.

The 6th June 1876.—*Messrs. G. L. Gibson* and *H. Mainwaring,* Assistant Conservators, 2nd grade, respectively, delivered over and received charge of the Tanná District Forest Office on the 25th April 1876, after office hours.

The 19*th June* 1876.—*Erratum.*—In this Office Notification dated 6th June 1876, published at page 491 of the *Government Gazette,* dated 8th idem, *for* "on the 25th April 1876," *read* "on the 7th May 1876."

Poona, 14*th June* 1876.

Messrs. G. Hewett and *H. Mainwaring,* Assistant Conservators of Forests, 3rd grade, respectively, delivered over and received charge of the duties of the District Forest Office of Colaba and Dápoli on the 15th June 1876, before office hours.

Messrs. H. Mainwaring and *C. A. Morphew,* Assistant Conservators, 2nd grade, respectively, delivered over and received charge of the District Forest Officer's Office of Colába and Dápoli on the 1st instant, before office hours.

The 24*th June* 1876.—*Mr. John McLeod Campbell,* Conservator of Forests in Sind, is allowed two years' furlough to England from 25th instant, under section 10 (*a*), and subsidiary leave from 18th to 24th idem, inclusive, under section 18 (*a*) of the Civil Leave Code, Second Edition.

The 5*th July* 1876.—*Mr. G. L. Gibson,* Assistant Conservator of Forests, having availed himself of the privilege leave granted to him in Government Notification of 23rd ultimo, from the 4th idem to the 2nd instant, the unexpired portion of the leave is cancelled.

The 28*th July* 1876.—*Mr. G. Hewett,* Assistant Conservator of Forests, has been allowed leave in India on medical certificate for six months from the 8th instant, and subsidiary leave from the 2nd to the 8th idem.

Mr. F. R. Desái, Assistant Conservator of Forests, Sind, is promoted from the 2nd to the 1st grade.

Mr. C. Greathead, Assistant Conservator of Forests, Sind, is promoted from the 3rd to the 2nd grade.

Messrs. R. C. Wroughton and *H. Mainwaring,* Assistant Conservators of the 2nd grade, respectively, delivered over and received charge of the District Forest Office of Násik and Peint on the 11th instant, after office hours.

Disposition List of the Officers in the Forest Department.

Direction and Division. Names and Head-Quarters, Latter in Bracket.	*Sub-Division.* Names and Head-Quarters. Latter in Bracket.	NAME AND RANK OF OFFICERS.
I.—GOVERNMENT OF INDIA.		
Inspector-General of Forests. (Head Quarters of Govt. of India.)	.....	Dr. D. Brandis, Inspector-General of Forests.
	Office ...	Mr. A. L. Home Deputy Conservator of Forests, 2nd grade, Assistant to the Inspector-General of Forests.
II.—SURVEY BRANCH.		
DIRECTION ... ... *Dehra Dún.*	.....	Captain F. Bailey, R.E., Deputy Conservator of Forests, 1st grade, Superintendent Forest Surveys.
(North Western Provinces.)	Office ...	Mr. W. H. Reynolds, Assistant Conservator of Forests, 2nd grade, Senior Assistant in the Survey Branch.
	Office ...	Mr. H. C. Hill, Assistant Conservator of Forests, 2nd grade, Junior Assistant in the Survey Branch.
	Office ...	Mr. J. T. Jellicoe, Assistant Conservator of Forests, 2nd grade, temporarily attached to the Forest Survey Department for a period of 12 months from 12th June 1876.
	Office ...	Mr. O. Greig, Assistant Conservator of Forests, 3rd grade Temporarily attached to the Forest Survey Department for a period of 12 months from 1st September 1875.
	Office ...	Mr. A. Stewart, Officiating Assistant Conservator of Forests, 3rd grade, temporarily attached to the Forest Survey Department for a period of 12 months from 22nd July 1876.
	Office ...	Mr. E. F. Litchfield, Officiating Sub-Assistant Conservator of Forests, attached to the Forest Survey Department
III.—BENGAL.		
DIRECTION ... ... (Darjeeling.)	.....	Dr. W. Schlich, Conservator of Forests, 3rd class.
	Office ... (Darjeeling.)	Mr. W. Johnston, L.C.E., Assistant Conservator of Forests, 2nd grade.
Darjeeling Division. (Darjeeling.)	.....	Mr. J. S. Gamble, M.A., Assistant Conservator of Forests, 2nd grade.
	Bamunpokri ... (Bamunpokri.)	Mr. F. B. Manson, Assistant Conservator of Forests, 3rd grade.
	Dumsong ... (Kalimpoong.)	Mr. F. H. Bonham Carter, Assistant Conservator of Forests, 3rd grade.
Jalpaiguri Division. (Jalpaiguri.)	.....	Mr. J. C. McDonell, Offg. Deputy Conservator of Forests, 3rd grade.
	Baxa ... (Baxa.)	Mr. E. Fuchs, Assistant Conservator of Forests, 3rd grade.
Palamow Division. (Daltonganj.)	.....	Mr. G. A. Richardson, Assistant Conservator of Forests, 3rd grade.

Disposition List of the Officers in the Forest Dept.—(Contd.)

Direction and Division. Names and Head-Quarters. Latter in Bracket.	*Sub-Division.* Name and Head Quarters. Latter in Bracket.	NAMES AND RANK OF OFFICERS.
III.—BENGAL—(*contd.*)		
Sunderbuns Division (Khoolna.)	.....	Mr W. Jacob, Deputy Conservator of Forests, 2nd grade.
Chittagong Division (Chittagong.)	.....	Mr. H. H. Davis, Offg. Assistant Conservator of Forests, 1st grade.
	Cox Bazar ... (Cox Bazar.)	Mr. E. G. Chester, Assistant Conservator of Forests, 3rd grade.
IV.—N.W. PROVINCES.		
DIRECTION ... ... (Naini Tal.)	.....	Mr. G. Greig, Offg. Conservator of Forests (on leave.)
		Mr. J. E. O'Callaghan, Offg. Conservator of Forests.
	Office ... (Naini Tal.)	Mr. J. M. Braidwood, Assistant Conservator of Forests, 2nd grade.
Kumáùn Division ... (Naini Tal.)	.....	Captain J. E. Campbell, Assistant Conservator of Forests, 2nd grade, offg. in 1st grade.
	Naini Tal ... (Naini Tal.)	Mr. J. M. Braidwood, Assistant Conservator of Forests, 2nd grade.
	Ranikhet ... (Ranikhet.)	Captain J. E. Campbell, Assistant Conservator, 2nd grade, offg. in 1st grade.
		Mr W. Craw, Superintendant of Nurseries at Ranikhet.
Garhwal ... (Nani Tal.)	.....	Mr. R. P. Colvin, Deputy Conservator of Forests, 1st grade.
Dehra Dún ... (Dehra Dún.)	.....	Mr. J. E. O'Callaghan, Deputy Conservator, 2nd grade, offg. Conservator, N. W. P.
		Mr. A. Pengelly, M.A. Assistant Conservator, 1st grade, acting for Mr. O'Callaghan.
	Eastern Dun ... (Dehra Dún.)	Shaik Mohi-u-din, Sub-Assistant Conservator (on leave.)
	Eastern & Western Saharanpur. (Dehra Dún.)	Mr. O. Greig, Assistant Conservator of Forests, 3rd grade (attached for the present to the Forest Survey Branch.).
Jaunsar ... (Chakrata.)	.....	Mr. C. Bagshawe, Assistant Conservator, 1st grade (on leave.)
		Mr. L. A. W. Rind, Assistant Conservator, 2nd grade Officiating.
	Tons ... (Chakrata.)	Mr. E. A. Down, Sub-Assistant Conservator of Forests.
	Deoban ... (Chakrata.)	Mr. E. P. Dansey, Assistant Conservator of Forest, II Grade.
Bhagirathi ... (Mussooree.)	.....	Mr. C. F. Amery, Deputy Conservator of Forests, 2nd grade.
Gorakhpur ... (Gorakhpur.)	.....	Mr. A. R. Grant, Assistant Conservator of Forests, 2nd grade, offg. in the 1st grade.
V.—PANJAB.		
DIRECTION ... ... (Lahore.)	.....	Mr. B. H. Baden Powell, C.S. M.R.S.E. F.R.A.S., Conservator, 2nd class.
	Office ...	Mr. W. Rigby, Assistant Conservator, 1st grade.

Disposition List of the Officers in the Forest Dept.—(Contd.)

Direction and Division. Names and Head-Quarters, Latter in Bracket.	*Sub-Division.* Names and Head-Quarters. Latter in Bracket.	NAMES AND RANK OF OFFICERS.
V.—PANJAB.—(*contd.*)		
Sutlej Division ... (Phillour.)	.....	Lieut.-Col. C. Batchelor, B.S.C., Deputy Conservator of Forests, 1st grade.
	Office ...	Mr. C. E. Fendall, offg. Assistant Conservator of Forests, 3rd grade.
Beas Division ... (Sultanpur-Kulu, *viâ* Kangra.)	.....	Lieut.-Col. W. Stenhouse M.N.I. Deputy Conservator of Forests, 1st grade.
	Hoshiarpur ... (Bholar.)	Mr. A. E. Wallace, Forest Ranger, Babu Kirpa Ram, Forest Ranger.
Ravi Division ... (Kalatop *viâ* Dalhousie.)	.....	Mr. W. G. Allen, Assistant Conservator of Forests, 1st grade.
	Kalatop ... (Kalatop.)	Mr. J. R. Pinder, Forest Ranger.
Chenab Division ... (Pangi *via* Chumba.)	.....	Mr. E. Sparling, offg. Deputy Conservator of Forests, 3rd grade.
	(Chengligulli *via* Murree.)	Mr. F. d'A. Vincent, Assistant Conservator of Forests, 3rd grade.
	Lower Jhelum ... (Jhelum.)	Mr. F. O. Lemarchand, Assistant Conservator of Forests, 3rd grade.
Rawul Pindi Division (Rawul Pindi.)	.....	Mr. C. F. Elliott, Assistant Conservator of Forests, 2nd grade.
Northern Fuel Reserve Division. (Jhelum.)	.....	Mr. W. S. Hillier, Assistant Conservator of Forests, 2nd grade.
	Guzrat ... (Guzrat.)	Mr. J. T. A. Monteath, Forest Ranger.
Central Fuel Reserve Division. (Lahore.) ...	.....	Mr. B. Browne, Deputy Conservator of Forests, 2nd grade.
	Multan ... (Multan.)	Mr. R. H. M. Ellis, Assistant Conservator of Forests, 2nd grade.
Plantation Division. (Lahore.)	.....	Mr. G. G. Minniken, Assistant Conservator of Forests, 2nd grade.
	Changa Manga... (Changa Manga.)	Vacant.
VI.—OUDH.		
DIRECTION ... (Lucknow.)	.....	Captain E. S. Wood, Conservator of Forests, 4th class.
Kheri Division ...	.....	Mr. R. S. Dodsworth, Assistant Conservator, 2nd grade, offg. in the 1st grade.
	1st *Sub-Division*	Mr. S. E. Wilmot, Assistant Conservator of Forests, 3rd grade.
Bahraich Division ...	.....	Mr. C. J. Ponsonby, Assistant Conservator, 1st grade, offg. in the 3rd grade of Deputy Conservators.
Gonda Division ...	.....	Ditto.
VII.—CENTRAL PROVINCES.		
DIRECTION ... (Nagpur.)	.....	Captain J. C. Doveton, Conservator of Forests, 4th class.
	Office ...	Mr. E. D. M. Hooper, Assistant Conservator of Forests, 3rd grade.
Northern Division ... (Mandla.)	.....	Captain C. W. Losack, Deputy Conservator of Forests, 3rd grade.
	Mandla ... (Mandla.)	Mr. H. Moore, Assistant Conservator of Forests 3rd grade.

Disposition List of the Officers in the Forest Dept.—(Contd.)

Direction and Division. Names and Head-Quarters, Latter in Bracket.	*Sub-Division.* Names and Head-Quarters. Latter in Bracket.	NAMES AND RANK OF OFFICERS.
VII.—CENTRAL PROVINCES.—(*contd.*)		
Western Division ... (Hurda.)	.....	Mr. E. E. Fernandez, Assistant Conservator 2nd grade.
	Punassa ... (Punassa.)	Mr. E. Dobbs, offg. Assistant Conservator of Forests, 3rd grade.
Pachmarhi Division.. (Hurdah.)	.....	Mr. W P. Thomas, Assistant Conservator of Forests, 2nd grade.
Southern Division ... (Chanda.)	.....	Mr. R. Thompson, Deputy Conservator of Forests, 2nd grade.
	Ahiri ... (Allapilli.)	Vacant.
	Mohurli ... (Mohurli.)	Mr. A. Smythies, Assistant Conservator, 2nd grade.
Central Division ... (Seoni.)	.....	Mr. J. McKee, Assistant Conservator of Forests, 2nd grade.
Saugor Division ... (Saugor.)	.....	Mr. G. H. Foster, Assistant Conservator of Forests, 2nd grade.
Eastern Division ... (Raipur.)	.....	At present without a gazetted officer.
VIII.—B. BURMAH.		
DIRECTION ... (Rangoon.)	.....	Mr. B. Ribbentrop, Deputy Conservator, 2nd grade, offg. Conservator of Forests, 4th class.
Rangoon Division ... (Rangoon.)	.....	Mr. R. H. C. Whittall, Assistant Conservator of Forests, 2nd grade.
	Eastern Sub-Dn. (Kadot.)	Mr. R. N. Anstruther, Assistant Conservator of Forests, 2nd grade.
	Western Sub-Dn. (Magaya.)	Mr. P. J. Carter, Assistant Conservator of Forests, 3rd grade.
Salween Division ... (Moulmein.)	.....	Mr. M. J. Slym, Deputy Conservator, of Forests, 2nd grade.
		Mr. M. H. Ferrars, Assistant Conservator, 2nd grade, temporarily offg. as Inspector of Schools.
Sittang Division ... (Tonghoo.)	.....	Mr. M. J. Adamson, Assistant Conservator, 1st grade, offg. as Deputy Conservator of Forests, 3rd grade.
	Shwégyeen ...	Mr. C. F. Nepean, Assistant Conservator, 2nd grade.
Prome (East) Dn. ... (Prome.)	.....	Mr. E. P. Popert, Assistant Conservator of Forests, 2nd grade.
Prome (West) Dn. ... (Henzada.)	.....	Mr. C. W. Palmer, offg. Assistant Conservator of Forests, 3rd grade.
IX.—MYSORE AND COORG.		
DIRECTION ... (Bangalore.)	.....	Captain J. G. Van Someren, Conservator of Forests, 4th class.
Nagar Division ... (Shimoga.)	.....	Major H. C. T. Jarrett, V.C., Deputy Conservator of Forests, 2nd grade.
	Kudur ... (Chickmaghur.)	Mr. E. Ludlow, Assistant Conservator of Forests, 1st grade.
Mysore Division ... (Mysore.)	.....	Mr. J. Macpherson, Assistant Conservator of Forests, 1st grade (on leave to Europe till 15th December 1876.)
		Mr. F. B. Dickenson, Assistant Conservator of Forests, 2nd grade.

Disposition List of the Officers in the Forest Dept.—(Contd.)

Direction and Division. Names and Head-Quarters, Latter in Bracket.	*Sub-Division.* Names and Head-Quarters. Latter in Bracket.	NAMES AND RANK OF OFFICERS.
IX.—MYSORE AND COORG.—(*contd.*)		
Hussan Division ... (Hussan.)	.....	Mr. D. E. Hutchins, Assistant Conservator of Forests, 2nd grade (temporarily employed in Mysore.)
Nundydroog Division (Bangalore.)	.....	Mr N. Daly, offg. Assistant Conservator, 1st grade.
		Mr. F. C. Hicks, Assistant Conservator 3rd grade.
	Devaroydroog ... (Tumkur.)	Mr. W. King, Assistant Conservator of Forests, 3rd grade.
		(Mr. J. T. Jellicoe, Assistant Conservator of Forests, 2nd grade, attached to the Forest Survey Department, Dehra Dún.)
Coorg Division ... (Mercara.)	.....	Mr. H. R. Ring, offg. Assistant Conservator of Forests, 3rd grade.
X.—HYDERABAD ASSIGNED DISTRICTS.		
DIRECTION ... (Chikalda.)	.....	Mr. A. T. Drysdale, Deputy Conservator of Forests, 3rd grade.
Northern Division ... (Chikalda.)	.....	Ditto.
	Bairagarh Reserve (Chikalda.)	Mr. J. Ballantyne, Assistant Conservator of Forests, 3rd grade.
Southern Division ... (Basim.)	.....	Mr. G. F. Prevost, Assistant Conservator of Forests, 3rd grade.
XI.—ASSAM.		
DIRECTION ... (Shillong.)	.....	Mr. Gustav Mann, Deputy Conservator of Forests, 3rd grade.
Gauhati Division ... (Kulsi plantation.)	.....	Mr. A. J. Mein, Assistant Conservator of Forests, 3rd grade.
Tezpur Division ... (Bhairabighat timber depôt.)	.....	Mr. W. E. D'Arcy, Assistant Conservator of Forests, 3rd grade.
Golaghat Division ... (Golaghat.)	.....	Mr. H. B. Condon, Sub-Assistant Conservator (on leave to Europe.)
Goalpara Division ... (Dhubri.)	.....	Mr. W. R. Fisher, B.A., Assistant Conservator of Forests, 2nd grade.
Cachar Division ... (Silchar.)	.....	Mr. W. Shakespear, Assistant Conservator of Forests, 2nd grade.
XII.—AJMERE AND MHAIRWARRA.		
DIRECTION ... (Ajmere.)	.....	Deputy Commissioner.
	Ajmere and Mhairwarra. (Ajmere.)	Mahomed Anwar Khan, Sub-Assistant, Conservator of Forests.
XIII.—MADRAS.		
DIRECTION ...	.....	Lieutenant-Colonel R. H. Beddome-Conservator.
On special duty ...	.....	Captain C. J. Walker, Deputy Conservator of Forests, 1st class.

Disposition List of the Officers in the Forest Dept.—(Contd.)

Direction and Division. Names and Head-Quarters, Latter in Bracket.	*Sub-Division.* Names and Head-Quarters. Latter in Bracket.	NAMES AND RANK OF OFFICERS.
XIII—MADRAS—*(con.)*		
South Canara ... (Mangalore.)	.....	Mr. J. W. Cherry, Deputy Conservator of Forests, 2nd class.
South Coimbatore ... (Coimbatore.)	.....	Mr. C. G. Douglas, Deputy Conservator of Forests, 2nd class.
Kurnul ... (Nundial.)	.....	Mr. R. Williams, Deputy Conservator of Forests, 2nd class.
Nilgiris .. (Ootacamund.)	.....	Major R. S. Jago, Deputy Conservator of Forests, 3rd class.
Tinnevelly .. (Palmacottah.)	.....	Mr. W. C. Hayne, Deputy Conservator of Forests, 3rd class.
North Coimbatore ... (Coimbatore.)	.....	Mr. R. W. Morgan, Deputy Conservator of Forests, 3rd class.
Malabar ... (Manontody.)	.....	Mr. A. W. Peet, Deputy Conservator of Forests, 3rd class.
South Arcot ... (Cudalore.)	.....	Mr. H. L. Wooldridge. Deputy Conservator of Forests, 4th class.
Malabar ... (Nelumbur.)	.....	Mr. J. Fergusson, Deputy Conservator of Forests 4th class.
Cuddapah ... (Cadur.)	.....	Mr. H. H. Yonde, Deputy Conservator of Forests, 4th class.
North Arcot ... (Vellore.)	.....	Mr. T. Sheffield, Deputy Conservator of Forests, 4th class.
Madura ... (Dindigul.)	.....	Mr. J. H. B. Brougham, Deputy Conservator of Forests, 4th class.
Unattached ...	.....	Mr. H. A. Gass, Deputy Conservator of Forests, 4th class.
Godavery ... (———)	.....	Mr. E. H. Boileau, Acting Deputy Conservator of Forests, 4th class.
Trichinopoly ... (Elamaner.)	.....	Mr. G. Hadfield, Probationary Assistant Conservator of Forests.
Salem .. (Salem.)	.....	Mr. A. W. C. Stanbrough, Probationary Assistant Conservator of Forests.
XIV.—BOMBAY, NORTHERN DIVISION.		
DIRECTION ... (Poona.)	.....	Mr. A. T. Shuttleworth, I.N. Conservator, 4th grade.
Broach, Surat, and Dangs or Guzrat Forest Circle. (Surat.)	.....	Captain J. G. MacRae, Bo. S C., Deputy Conservator, 2nd grade.
Poona and Sholapur.. (Poona.)	.....	Mr. W. H. A. Wallinger, Deputy Conservator, 3rd grade.
Colaba and Dapoli ... (Alibag.)	.....	Mr. C. A. Morphew, Assistant Conservator, 2nd grade Mr. M. J. Hewett, Assistant Conservator 2nd grade (on leave.)
Tanna ... (Tanna.)	.....	Mr. G. L. Gibson, Assistant Conservator, 2nd grade. Mr. H. Mainwaring, Assistant Conservator, 2nd grade.
Nassick and Pennicke States. (Nasik.)	.....	Mr. R. C. Wroughton, Assistant Conservator, 2nd grade.
Satara ... (Satara.)	.....	Mr. W. J. C Dunbar, Assistant Conservator, 2nd grade (on leave) Mr. Shewan, C.S. acting.

Disposition List of the Officers in the Forest Dept.—(Concld.)

Direction and Division. Names and Head-Quarters, Latter in Bracket.	*Sub-Division* Names and Head-Quarters. Latter in Bracket.	NAMES AND RANK OF OFFICERS.
XIV.—BOMBAY, NORTHERN DIVISION.—(*contd*)		
Punch Mehals, Ahmedabad, and Kairar or Northern Forest Circle. (Godra.)	.....	Mr. T. B. Fry, Assistant Conservator, 2nd grade.
Khandesh ... (Dhulia.)	.....	Mr. N. B. Oke. Sub-Assistant Conservator of Forests, 1st grade.
Ahmednagar ... (Nagar.)	.....	Mr. N. A Okidwe, Sub-Assistant Conservator of Forests, 2nd grade.
XV.—BOMBAY, SOUTHERN DIVISION.		
DIRECTION ... (Yellapur and Belgaum.)	*Southern Division, Bombay Presidency.*	Major W. Peyton, M.S.C. Conservator of Forests, S.D., 4th class.
Kanara ... (Yellapur.)	..... (Yellapur.)	Mr. H. Barrett, Deputy Conservator of Forests, 1st grade. Vacant.
Kanara ... (Karwar.)	.....	Mr. E. J. Ebden, C.S., Assistant Collector, on special duty, selecting and demarcating Forest Reserves in Kanara.
Belgaum ... (Belgaum.)	.....	Mr. R. B. Oliphant, Assistant Conservator of Forests, 2nd grade.
Belgaum ... (Belgaum.)	.....	Mr. J. L. Laird, Assistant Conservator of Forests, 2nd grade, employed since 1873 in selecting Forest Reserves. Mr Laird, having completed the selection of Forest Reserves in Belgaum, will be transferred to Kanara for the same purpose from November next.
Dharwar ... (Dharwar.)	.....	Mr. W. G. Betham, Assistant Conservator of Forests, 2nd grade.
Kaladgi ... (Kaladgi.)	.....	Mr. Annaji Venkatras, Sub-Assistant Conservator of Forests, 2nd grade.

XVI.—THE SIND

The List of Officers asked for has not been received.

THE

INDIAN FORESTER.

Vol. II.] JANUARY, 1877. [No. 3.

Note on the Demarcation of the Forest Area in Districts containing Hill or Mountain Ranges.

By B. H. BADEN-POWELL, F.R.S.E., M.R.A.S.,
*Conservator of Forests, Punjab.**

SOME misapprehension appears to me to exist about the principles on which forest lands in hill districts ought to be demarcated. We have just been dealing with the Hazára forests, and correspondence is pending regarding the demarcation of Kángra and Kulú, and of Jhelum, *viz.*—the Salt Range forests, and the hill portions of Ráwal pindí district, also of the forests in Chamba and Basahir. Moreover, in the tehsíls of the Kángra district already demarcated, Núrpur, Dehra and Hamírpur, and in the Hoshiárpur district, certain interests and requirements have been met, but it is far from certain that the demarcations are sufficient for *all* the requirements of the case.

Throughout the correspondence no notice has been taken of the important difference which exists between the work of demarcation in Hill districts and that in the plains.

In the former case we have a set of conditions to deal with, which do not affect the latter; so much so that it is certain that what is sufficient for the plains, will not be satisfactory in the hills.

Forests have two great purposes:—First, they yield timber and other produce; secondly, they occupy a certain place in the organization of nature; and just as it is impossible to neglect certain conditions regarding circulation of atmosphere, drainage and cleanliness in the organization of towns and cities,

* This note was originally printed for private circulation, and a copy kindly put at our disposal by the Author. As the excellent principles developed in it are applicable to many parts of India, we have reprinted it in extenso.—THE EDITOR.

so is it impossible to neglect the use of forests in the organization of our hill districts, without the certainty of danger.

Now the second kind of utility of forests consists in two sorts of influence which they exercise on the air and soil. One though extremely probable, and believed in by all educated foresters, is not so certain as to be beyond doubt, and therefore need not to be appealed to as a *sine quâ non* in our demarcation proposals. I allude to the faculty of forests in collecting the rain-clouds and increasing the rainfall. Negatively we know, that drought results from denudation, but we do not know positively, that we can induce rain-fall by the creation of forests.

But the other faculty of forests we do know absolutely for certain; and therefore any demarcation of forests that ignores it, is certainly faulty and can only be partially successful; it may be briefly summed up as the faculty of regulating the water-supply of the country and preserving its soil.

Rain falls (in this tropical and semi-tropical climate) with copiousness at certain seasons, and with a varying amount of physical force. This discharge, either feeds and maintains springs, or is itself the origin of streams and torrents, which, rising in mountain ranges, flow down into the valleys and plains below.

If all mountains consisted of insoluble rock, the water flowing off with greater or less rapidity (according to angle of inclination) could do nothing till it reached the plain or valley below. But this is not the case; consequently the fall of rain affects the soil on mountain slopes by cutting into it, and carrying it down, together with loose stones and masses of rock, doing this either gradually, as where surface soil is slowly removed, or where a ravine or torrent is gradually cut and enlarged—or suddenly as when a land-slip occurs. The disturbance once started in the upper slopes of mountain ranges, augments with the accumulated force obtained by the angle of descent, and thus it happens, that small streams uniting form large torrents, which increasing in power as they flow down, influence the condition of the soil in the valleys, not only by erosion and by depositing beds of stones and even large

masses of rock, but also by causing the streams to be suddenly flooded without notice, and thus causing a great rising of other streams which receive their contents, the effects of which are felt far down into the plains, and even to the mouths of rivers, where vast alluvial bars are formed, seriously impeding navigation. On their way, such floods damage all kinds of public works, roads, railways, and bridges, and necessitate the erection of costly masonry works, embankments, dams, and retaining walls. During the winter when water accumulates in the form of snow on the upper slopes of hills, large masses are collected, which, when melting sets in, begin to slide downwards, doing incalculable damage.

It is truly surprising to find how little attention is attracted by these facts.

In Hoshiárpur, I have been told by an Assistant Commissioner engaged on Revenue work, the streams *(Chó)* flowing down from the Sola-Singhí hills are year by year cutting up and destroying more and more land; and the people are now compelled to plant masses of tall grass to arrest the progress of the ravines. In the Jhelum Salt Range, the torrent beds are reaching an alarming extent; and what is more, the saline deposits of the Range are yearly washed down, defertilizing the lands below.*

If we are to follow any of the notorious Punjab torrents, such as the Bhimbar, we shall find that either the main stream, or its feeders in their ultimate ramifications, start from hillsides wholly, or almost wholly denuded of vegetation. This fact can be verified in all cases almost without exception.

Year after year immense sums are spent in repairing our great hill roads† which are carried away by the action of

* I may be permitted to suggest that it would be well if the Government were to call for accurate statistics as to the extent of such torrent-cut areas in those districts, and the amount of increase which has taken place in the last decade or so.

† With regard to hill roads, I do not mean to deny that where there is a steep bank above the road, trees too close are liable to fall: nor do I question that in very rare cases, the retention of a large amount of water may soak into, and so overweigh, a bed of soil reposing on a steeply inclined stratum of imperviable material, and cause it to fall down. For every one landslip attributable to such a cause, a hundred can be shown arising from the denudation of the soil and its consequent loosening by water action. Nor will the most able advocates for the old theory be able to contest the actual fact, which every one can verify for himself, on the Abbotabad or Simla road, that the worst ravines and road-cuttings occur just in those miles where the forest belt has disappeared from the hill side at some little distance above the roadway.

torrents formed on the steep slopes above them. Costly railway bridges and embankments are built, rebuilt and again swept away; cultivated lands are covered with boulders; lands are cut up by changing courses of unregulated streams; the bottoms of valleys are filled up with stones and boulders instead of showing rich pasture and cultivated lands, with winding clear streams flowing through them,* and we accept it all as a matter of course.

It is sometimes urged that the action of streams in bringing down soil on to the plains below is actually beneficial. An instance is quoted in the Dehra Ismail Khan district of lands whose culturable quality is annually improved by the descent of finely comminuted mud from the hills of the Sulemān series.

It is true that in this particular case benefit is obtained; for the hills never were (it would seem) clothed with vegetation, and as they are formed wholly of marl and sandy loam they are gradually and gently being washed away. Wherever a hill consists wholly of soft material capable of being discharged in this way, the results are good; and no doubt the alluvial plains of the Punjab were formed in pre-historic times by such a process. This improvement of soil is called in French "*colmatage.*" But it is clear, first, that hills consisting entirely of disintegrable soil are the rare exception; and next that in case of hills whose surface only, is covered with good soil, as soon as the supply of soil is at an end, sand, pebbles, stones, boulders and rock-masses follow, which speedily cover up the ground and negative the good at first effected.

It follows, therefore, that as it is the velocity which the water acquires from flowing down steep inclines that causes a great portion of the mischief; it is our mountain ranges, whether the higher ones like the Himalaya, or the lower ones like the Sawálik, the Sola Singhí, the Salt Range and the Pabbi hills, that call for our most earnest attention in regard to the preservation of the natural clothing of vegetation which they ought to have, and

* In Hazára—after leaving a village called Dabbin, one ascends to a hill called Thárkot; from this a bird's eye view is obtained. You then see hills sparsely covered with Chil (*Pinus longifolia*) apparently standing out like islands in a lake of blue-grey boulders. Over 85,000 acres are occupied in this district by stony river beds.

which in all probability, (nay, in most cases—in all certainty) they once did possess.

In short, while the climatic influence of forests in the *plains* is limited in various ways, and chiefly by the absence of steep inclines which give the water discharged from the earth or air a dangerous velocity; in the *hills*, it is *the* consideration which before any other we have to deal with in preserving our forests. In the plains, therefore, if we select manageable blocks of forests, free of rights, (which interfere with conservancy,) and place those blocks near roads, railways, and large towns, (thus meeting the direct utility of forests as supplying material to the market) and if further we are careful to plant swamps and retain natural forest (like the "Kachi") on the banks and islands of rivers, and then leave all the rest of the wooded area to be very slightly protected, (*e. i.*, only gradually destroyed by unlimited exercise of rights of grazing, &c., and by permissive extension of cultivation) we do all that (we can with reasonable certainty say) is sufficient.*

In other words, the popular system of "reserved" forest blocks and "unreserved" areas, so widely known in India, *may* be in the plains, a sufficiently effective system.

The mistake I here combat, consists in supposing that a precisely similar system will answer in the hill districts; and this mistake has been made (and that recently,) in many official notes and orders which otherwise show that rational appreciation of forest economy which was so lamentably wanting in years past.

When, therefore, we commence the work of demarcation in hill districts, we must first of all consider what amount of forest is needed in every range alike:—Where is the line above, or within which forest or turfed land must be maintained? IT IS NOT ENOUGH to consider solely what blocks can we get *free of rights for the State*, but what forest must we keep, perhaps assigning the *greater part of it* to the use of the villagers or other local inhabitants.

Hitherto, we were accustomed to consider only what blocks

* Assuming of course that we have calculated fairly the amount of demanded material, the probability of increase and the other conditions involved.

of forest we can get for the supply of the market, the Public Works, the Hill Stations, &c., &c. This of course must be attended to, but it is obvious that we may secure such blocks in a comparatively small number of localities, leaving whole ranges of hills untouched by such reservation. And while the forest set apart on these considerations only, may suffice to protect the hill sides and regulate the water discharge (in the widest sense of the term) *just on the sites* selected, the other hill ranges in which no such selection has been made will not be benefited; and if we give up the forest (be it timber or brushwood) on those hills to that process of sure but retarded destruction which our "unreserved" management implies, we are doing wrong, for which avenging nature will surely if slowly punish us.*

Unlike the case of forest in the plains therefore we *cannot* choose certain localized blocks of good forest and leave all the rest to the people to do as they like with as "unreserve." It is desirable that there should be no misunderstanding on this subject.

Under what sort of management is "unreserved" forest usually placed? Does that management really tend to the permanent preservation of the forest? If it *does*, then let it alone—but if it *does not* then we *must* improve it.

There may be of course varieties in detail, but generally speaking it comes to this: that "unreserved forest" is to be left

---

* At this stage it is desirable to say something about the use of *turf* on mountains. Those who have taken an interest in the question of the denudation in the Alps, an evil which assumed such alarming dimensions that at last in 1860 legislative interference was called for, and laws for effecting the "reboisement" (or re-clothing with wood) the necessary portions of hill ranges were passed, will recollect the discussion which arose, as to whether the absolute planting with trees was needed, or whether the consolidation of the soil by turf (an operation called "*gazonnement*) was not sufficient. It had the advantage of not interfering so much with the grazing of cattle (which there, as here, was the chief obstacle to forest conservancy) as the planting of continuous masses of trees.

I cannot here enter into the discussion as to whether (even in Europe) "gazonnement" is a really sufficient remedy. Some have denied it · on the whole, however, it would seem that turf (including a dense mass of bushes and other vegetation) is in many localities, at any rate sufficient.

We have, however, in India, another point to look to.

In the Alps and Europe generally, the grasses are of different species as a rule to those found in our semitropical climate. It is only in our very high ranges and usually above and beyond the limit of tree vegetation that close turf forming European and Alpine species predominate. In our Indian Ranges (except the highest) the grasses grow more in tufts or crowns, so that the rain falling with violence between the tufts, attacks and eats out the soil; thus the grasses of these species do not efficiently protect the soil in many cases.

open to the *unrestricted use and enjoyment of the people.* Phrases descriptive of this class of forest, couched in these or similar words, will occur to every one. This use and enjoyment is very generally regulated only to the following extent :—

(*a.*) Certain valuable trees are not to be cut at all.

(*b.*) Other trees are to be cut for agricultural and domestic use (including fuel) without restriction, but large trees for building, &c., are granted (free, or at reduced rates) by *permit* issued from the District Office.

(*c.*) Breaking up of land is allowed on permission of the District Authority; this permission is usually refused *if it is known* that good trees or forest are on the land.

(*d.*) Grazing of all kinds of animals (goats and camels not excepted) is absolutely unrestricted (may be paid for or not, that does not affect the preservation of the forest.)

(*e.*) Burning is sometimes prohibited, sometimes not.

In places where practiced, "khill" or "kúmri" or "dahya," or "toungya"* cultivation is partially restricted.

(*f.*) Usually the people are to use the produce, &c., for themselves, but are not allowed to *sell* it to contractors, merchants, &c.

On this, three things appear :—

I.—It is clear that unless the amount of material taken out of the forest in the shape of trees and fuel does not exceed the amount annually produced, the forest capital or stock will be reduced gradually, and ultimately destroyed.

It is also clear that in unreserved forest, the authorities are not furnished with any principle, or with any means of knowing what the yield can really be. There is only a *chance* that by refusing some, and reducing in amount most, permits, they *may* be within the limits of proper yield; this chance is *less,* the fewer mature trees there are and the poorer the forest is.

* By these names is known in different parts of India and Burma, the method of cutting down a plot of forest,—burning the dried material, digging the ashes into the ground, and cultivating the spot for one or two crops; after which the cultivator moves off to another spot of virgin forest, (or forest that has recovered itself) and begins again.

II.—As regards cultivation; there is only the same *chance*, that the gradual reduction of the forest area by cultivating permits *may* be proper; the *less* the area of unreserved forest, the less the chance.

Again a given area of cultivation—clearing which might be allowable in one situation, may become very improper in another.

It is urged, however, that the position of the area applied for can be ascertained from the village map.

Even if in every case of breaking up for cultivation (which generally proceeds by little bits at a time in hill districts) we were sure that the irregular little plot *was* pointed out to the District Officer on the map, so that he could refuse it on consideration; even if this *could* be done, it must be admitted to be a troublesome way of doing what could be done more effectually and more simply in another way, *viz.*, fixing a line beyond which cultivation may *not* go, but within which it is allowable at the pleasure of the owners (subject only to proper notice for revenue purposes.) In practice, permits to cultivate in each case are not, and cannot be, looked into minutely enough to do any good. The plot broken up is usually, (as I just observed) at first a small indefinite patch. The area is not known, and its position not correctly indicated. No limit is placed practically to the area broken up when a permit is once issued. If a dermarcated line on the ground is fixed, cultivation cannot take place on the wrong side of it without discovery at the first inspection.*

III.—That grazing being unrestricted, the restoration of the forest by coppice or seedlings to replace the material that is removed, cannot possibly occur, otherwise than partially and imperfectly, and in out-of-the way portions of the forest, where the cattle do not come; and the larger the population and the more numerous the cattle

* Of course proper inspection, and a proper establishment are the *sine quâ non*, for any system whatever.

(especially where goats abound) the more imperfect and the more partial will the restoration be.

Where burning and "dahyâ" cultivation are allowed, the chance of the forest is indefinitely made worse.

From these three considerations it undeniably follows, that the general idea of management involved in the "unreserved" system can only be sufficiently successful in practice;

(1.)—Where the area of forest is very large and proportionately well stocked, and when the population and cattle are also proportionately not numerous.

(2.)—Where *also* the District Officer takes a very great interest in the forest, has taste and time to visit it himself, punish strictly all acts of waste and destruction, and *is not obliged to delegate his authority in the matter of 'permits' to subordinate native officers, who again delegate it to village watchmen and the like.*

As in most of the hill districts in the Punjab the first condition does *not* exist, and as regards time and opportunity, the second exists only to a limited extent, it follows inevitably that the "unreserve" system (as it is at present in vogue) does *not* suffice to secure the proper preservation of those forest lands which are not taken up as "Reserves," and which I have already shown *are* necessary to be preserved in hill districts,* though they may not be so in the plains.

The *rationale* of the failure of the "Unreserve" system under such conditions, is that it is *based upon mere guess-work* (however intelligent) not upon any actual examination of the ground itself, or upon an estimate of its capability; so that when a District Officer's hands are full, where the population is numerous and the demands for cultivating and tree-cutting permits numerous also, it is impossible for him to check

* In Hazara, the Deputy Commissioner and Settlement Officer remarks:—"The "total waste area being 13,98,748 acres, of which only 11 *per cent.* is reserved forest "and 75 per cent. is other hill waste, no argument is needed to show the importance "of retaining an efficient control over the unreserved wastes."

In Kángra a late Deputy Commissioner defending the district management warmly, on the ground of the influence of the District Officer being paramount, admits that large areas of forest have been cleared, and that the supply (even) of timber is threatened. In the demarcated tehsíls of Kángra and Hoshiárpur, though the works carried out with great skill, probably settle the question *of supply of material*; it is doubtful whether areas are sufficient to protect the district in other respects. In Hoshiarpur it is negatived by actual facts.

efficiently the issue of such permits, having neither *data* regarding the condition and contents of the forests, nor principles to determine the limits of the possible area of cultivation. Even if by the careful understanding of the sort of places on which cultivation ought to be prohibited, he laboriously checks every application with the village map, and is further assured that the cultivation is of that extent and area which is applied for and no more, and thus saves his forest land from conversion, he may nevertheless issue permits for *cutting* in the forest to such an extent, that the material being exhausted, a long period must intervene during which no wood is obtainable, the ground being either bare, or covered only with young growth demanding years for its development to useful size.

It is sometimes proposed to remedy this difficulty by issuing a set of local *rules* to regulate the issue of cultivating, and tree-cutting permits: but in the former case the rules can only define certain conditions, under which cultivation is not to be allowed; and the simpler way is to cause the line to *be laid down on the ground and entered on the village "Shajras."* In the latter case no rules can be a substitute for the one and only way of regulating cuttings;—*viz.*, an examination of the forest, and an enumeration of its stock, by one or other of the known methods of forest-valuation.

If so much is admitted, as I think it must be by any one who will candidly examine the subject (throwing aside the prejudice which has grown up in favor of a too easily excepted and *primâ facie* satisfactory system,) a difficult question arises for solution which may be thus stated:—'All forest conservancy comes in contact with the prejudices of the populace by requiring to a greater or less extent, the restriction, or even total cessation of many practices which they are accustomed to, and the exercise of which they look on as a matter of right, while totally ignorant of the mischief those practices entail.—' 'Our plan has consequently been to restrict our conservancy to certain defined areas, and allow the rest of the forest to be open to all such cherished practices;—thus we solve the difficulty off hand. When, therefore, you say that those areas are insufficient, you compel us to interfere with the people's practices

to a much larger extent even possibly to the extent of embracing the entire area of forest land in a given district; this would involve an amount of popular discontent which we are not prepared to face.'

When this argument is stated to persons in authority, who have a limited or comparatively weak faith in the reality of the mischief done in ever widening circles, by forest destruction,* as indicated in the foregoing pages, they will at once *over-rate* the amount of *local* inconvenience suffered by the limited population in the hills, and *under-rate*:—1st, the benefits to those very people themselves which can be given in return for the restriction; and 2nd, the benefits to the country at large; the cessation of dangerous floods, the extended area of culturable land, the absence of erosion and diluvion, the safety and cheap maintenance of roads, bridges, and public works, which are the direct and indirect advantages to be set off against the inconvenience. They over-rate the one because it is palpable, though often exaggerated and expressed in highly colored terms (if officials are found willing to listen;) they under-rate the other, because they only partially believe it, or are unable to trace the facts to their true explanation. If then we are able to establish the real evil and get people to realize it, they will come into a different frame of mind when looking at forest questions, and will be prepared to feel that somehow or other the necessary conservancy *must* be effected, and will cheerfully set to work to see how it can be done.

The complete illustration and proof of the evil cannot be attempted within the limits of a mere paper like this, but the considerations already advanced cannot be without weight. If violent tropical rain falls on a surface either bare of vegetation, or protected only by sparse tufts of grass and occasional bushes, it follows that the soil must be cut away; first a little gutter or channel, then a deeper ravine is formed. The water begins to rush impetuously in a turbid stream along this, then stones and mud fall in, then larger stones; and as the fall goes on, the increased velocity and mass urge the destruction more

* See a paper on popular aspects of forest conservancy in the "Indian Forester" or July 1876. (Calcutta "Central Press Company.")

and more powerfully, till huge boulders are carried along and masses of earth swept away, which when the flood subsides, no one would suppose could have been moved by such agency.

This is repeated in numerous little channels all running together, according to the configuration of the hills, till they unite into one big torrent which sweeps with resistless force through the valley below—and into the plains beyond.

If on the other hand the land is covered with trees, first there are the spreading branches, leaves and twigs to arrest the fall to break its force, to absorb part of it and cause it to remain suspended till evaporation takes place; then there is the mass of dead leaves, moss, and soil under the trees, the absorbent power of which is truly marvellous, and fortunately for us has been the subject of exact scientific observation.* The roots of the trees below the soil again have a powerful effect both in combining the soil and in absorbing moisture; in this latter respect exercising a powerful influence on the regulation of those under-ground springs, which sometimes start landslips in the shaly soil so abundantly found in the Himalaya. The water not absorbed is gently given off in clear streams, and is compelled to discharge itself slowly, the force of its fall having been thoroughly broken. That which is absorbed is slowly returned to the air by surface evaporation or is imbibed by the trees and plants and descends to feed springs and keep the sub-soil moist.

To show how the preservation of forests and the reclothing of verdure (which in many cases nature will effect herself by rest and protection for cattle) will stop these torrents, close

* GERVIG, of Karlsruhe, has made experiments showing that 5 parts of ordinary forest moss and soil can absorb 30 parts of water in ten minutes, which is equal to a column of water of 4·466 millimetres, or 0·1756 inches. In mountain forests where the moss and soil are deeper, the column of water thus detained was found to reach 10 millimetres. If we add to this the large amount of water absorbed by the lower soil (sub-soil) it has been found that 2 to 3 centimetres, or under favorable circumstances even an inch of water has been absorbed. An area of 16 square miles of forest can absorb and retain 43—64 *million cubic feet* of water which would otherwise have rushed down the bare hill sides. (Forest conf. 1873, p. 97.)

In France in the department of Meurthe two streams the Zorn and the Bievre were selected, each situated on similar soil, slopes, &c. The basin of the one is wooded, of the other nearly bare. Observations made on the superficial drainage or flow, and on the increased flow of the stream after a given amount of rain-fall (equal in each case) show co-efficients of force of action not far short of double in the denuded basin and stream, what it was in the wooded. Too much stress must not however be laid on this conclusion. The experiments require to be multiplied. It is only fair to note that another experiment made by French Engineers gave different results.—B. H. B. P.

BENGAL SECRETARIAT

up ravines, and consolidate land slips, it is necessary first to observe the mountain sides, intelligently, in view of these considerations, while touring in the hills; and secondly to read such books as Geo. Marsh's "The earth as modified by the action of man" (Sampson Low and Co.) and Dr. Croumbie-Brown's "Reboisement in France" (H. S. King and Co.) with notices in "Humboldt's Cosmos" and other works.

Here I can only repeat that the action of forest in regulating the action and supply of water—as affecting not only the hills and valleys themselves, but the districts far away in the plains—or is the most prominent use of forest in hill districts, and the chief one to be remembered in determining the extent of forest to be preserved; and that this is no doubtful or fanciful theory of foresters; it is one of the most certain and practical of the results of forest science.

It may be added, that if nature has clothed the hill tops and sides almost invariably with forest, it was for a wise purpose; and we cannot to any great extent upset the arrangement without disastrous consequences. Of course this last argument has its limits, because we see countries where the tropical vigor of vegetation covers *every* spot, hill or plain, left to itself; and here obviously, a partial (but never a total) clearing is necessary for man's place in the scheme.

To gain a full and hearty assent to these considerations, which (from reading the notes and opinions and correspondence on demarcations in the hills of the Punjab appear to me to be probably new to many, not only in official circles generally, but even in the Forest Department itself) is the first and most important object.

Once gained, it will cause us to look in an entirely new light on the hardship to the population that immediately surrounds the forest which is the object of our solicitude. We shall be led to ask 'cannot we draw a line somewhere, *outside* which people can still do as they please; and cannot we while restraining their action *within* that line, let our interference produce such good results to their pecuniary and other benefit—that they will before long be quite reconciled to the restriction?' In other words 'we have hitherto accepted without further

enquiry the idea that we can only preserve a little forest and let the bulk go almost unrestricted to the people; is there no better plan that this?' Is not the principle of consoling the people by giving *them the income to enjoy, not the forest itself to destroy* at least satisfactory to them?

To determine this, let us examine the old 'permit' system more closely. The chief reason why it acts so easily, is that it is *rarely* enforced fully. Permits are given very easily; they are also easily exceeded or evaded, and so the system is not as much felt as it would be, if really carried out. Of how many codes of Forest rules for "unreserved forest" *can it be said that all its restrictions are always fully acted on?*

From our former observations we have seen that the principles on which such rules are based, do not really provide for the efficient conservancy of the forests, and that they *cannot* be carried out properly by reason of the want of time and opportunity, and the absence of data and information as to facts; we may now see also that even if it were strictly carried out, the old system would inflict a *good deal* of trouble on the people, and that sometimes unnecessarily.* For instance why should a man go twenty miles to a tehsil for a permit for cutting, say, ten trees, if it were *known* that either the forest could properly yield it (in which case no permit would be wanted) or that it could not, (in which case a permit ought not be granted)?

Again it is essential, under a system which imposes the restraint of permits issued really by guess-work, that *sale* and *profit-making* should not be allowed,—the village owners must only take what they want at *their own use.* If the forest can really yield more, why should they be debarred from selling it?

Now if we return to the requirements of forest conservancy, and see what restrictions we really need to impose, we shall be in a position to compare them with those imposed by the

* In some codes permission is required to break up land for cultivation *if it bear trees*, and (very absurdly) is not required if there are no trees. If a man wishes to cultivate he has either to get a permit or destroy the trees first, so that he may say there are none! This distinction offers a direct temptation to people to destroy trees.

old system; (supposing it to be enforced), we shall be able to strike a balance between our proposed system and the old, in point of convenience.

In the first place what improvement is possible on the system of governing the unreserved forests by permits?

We have to provide for the maintenance of the unreserved forest, at the same time meeting the wants of the people as regards extension of cultivation and grazing.

We can dispose of grazing first. It can generally be provided for within the forest area:—

(1).—In forests of trees so aged as to be out of danger.

(2).—In places within the forest limit which are turfed only—or having patches or belts of trees, left on them, thus combining the use of forests and grazing ground.

This method so largely adopted in the Alps, demands very careful consideration in the Himalaya, wherever the grazing question presses; it is by no means difficult to arrange something of this sort, which provides for the cattle, while enabling the area to fulfil to a sufficient extent the function of forest.

(3.)—It can be practised in the option of the villagers in any lands *outside* the forest line, and they must decide in their own interest, whether they will cultivate all the land or keep some part of it for grazing.

I beg here to impress on the authorities the great value of statistics of cattle. Not only should we know what number of head of cattle of all kinds the people possess, but also we should learn how many acres per head are needed, on good, fair and indifferent ground. When we speak of the "grazing requirements of the people" without knowing these *data* we are *really* only going by guess.

Where cattle are *so* numerous, that all the provision we can make within the limits of the forest area, are insufficient, then the people themselves must consider (the 3rd case, *viz.*,) how they break up the land outside their limits for cultivation, and must decide between the profit to them of cultivation and grazing; there is a limit beyond which neither one or the other can possibly extend.

We are now free to consider what land must be kept as

forest, and what may be cleared for cultivation (subject only to the consideration last broached.)

As the dangers to be guarded against are avalanches, landslips, erosion of soil, and torrents or ravines—and as we have also to preserve the water in existing springs and streams, it follows that on all hills forest land must be maintained;

(1.)—On the sharp crests or summits of hills, and in a belt along the top.

Where the top is an undulating or flat surface, it may be cultivated; in that case a belt of forest on the verge of the slopes of the hill just below the undulating summit, must be kept.

In these cases the width of the belt is determined by local inspection, and by the relation of the belt with other circumstances mentioned below.

(2.)—On all steep slopes, say of 50° and over. If these are bare or cultivated, soil is sure to be washed off, and landslips to follow:—Any one's experience of a hill tour will confirm this.

(3.)—The fan-shaped hollows, basins or amphitheatres from which the ultimate branches or feeders of streams and torrents take their rise. This includes the sources of all streams and springs.

(4.)—The banks of ravines, torrents and streams, down to their junction with the stream at the bottom of the valley.

If therefore a *line,* which I may call the "compulsory forest limit," were drawn along every hill range, taking in these four conditions,—we should have a proper protective belt of forest, *outside* which it is immaterial on climatic grounds what is done with the soil.

(5.)—Practically, however, to these four conditions we must add a 5th on economic grounds; *viz:* that where, *outside* these conditions, there are blocks of forest, which owing to the value or interest of their trees, or from their obvious utility to certain villages or to the market supply, it would be undesirable to destroy or clear away, the forest is here also to be kept up.

The 5th condition differs in this respect from the other four, that while they are absolute, and forest must *always* remain in such places; the economic value of the 5th may in course of time cease, and therefore the rule may be expunged along with the necessity for it, *e. g.*, when the forest under the four conditions is so well kept and contains a sufficient supply of material so that nothing more can be needed, the forest originally retained under 5, may gradually and entirely disappear without danger.

If then in every hill range we demarcate by natural marks or by pillars, the line* which includes all this forest, it is obvious that the same line on the other side will indicate the area within which cultivation may be extended.

For such extension no permission need be asked; only the Revenue authorities will need to be properly informed of the intention to cultivate, and will make such orders (totally unconnected with forest interests) as Revenue requirements may dictate.

Here is the utmost simplicity and the first great boon to the people.

(*a.*)—It will be unnecessary to go many miles for a permit, with a chance of refusal.

(*b.*)—It will be unnecessary to pay any one for settling the permit to cultivate.

(*c.*)—It will inflict no labor on the District Officer—either to try and trace the spot on the map, and be sure that the position is a proper one; it will supersede the necessity for a repeated visiting the localities after once the careful local inspections necessary to fix the "line" has been effected.

(*d.*)—It will be impossible to evade the law, for the inspecting officer seeing that any patch of cultivation is on the wrong side of the line will stop it at once and apply the penalty.

* The old French Government in the Mauritius adopted a similar plan—only they fixed a more arbitrary line, *viz.*, they reserved the upper third of every mountain as forest, and prohibited clearing thereon. This was a simple plan, but sometimes it would include too much forest, and sometimes (as in the case of ravines extending down the mountain side) not enough.

(*e.*)—As the forest above the "line," (where it is not reserved as Government property,) will be village land, the whole income, produce and yield of which belongs to the villages, they will come soon to regard the "compulsory line" as one for their own benefit and not as bringing into contact with them, an alien and adverse property.

But some readers, before they have had patience to read even so much, will exclaim, that this looks all very well, but that in practice, we are not going into a virgin country with nice forest of one sort or another ready to be carved out and aligned, but we shall find that when we attempt to draw our "compulsory line" villages will already be found perched on the steep slopes, and that cultivation has encroached on the forest, and whole tracts of forest have been destroyed by excessive grazing—showing only stony slopes with stunted bushes and patches of grass tuft; and as for ravine banks, they will exhibit great slopes of loose earth and stones ready to come down next rains.

All this is perfectly true. I have only to say, that it is no reason against a right procedure, that you cannot act on its integrity. Still keep your idea of 'the line' and do your best, and you have these remedies to help :—

(1.)—Take all the waste land inside "the line" whether turfed, bare, or illused.

If it is turfed, by arranging to close a bit of it at a time, you may get natural growth on it, or even get some rough sowing or cheap planting done,—especially you may gradually reboise it in belts or patches, so as to allow free circulation of cattle between the belts.

Bare banks of ravines taken up, will soon clothe themselves with bushes and vegetation enough to be of great use in consolidating the soil.

In the Himalaya *mere rest and protection do wonders.*

(2.)—Look into the cultivation (often temporary and very worthless) that encroaches on 'the line;' in some cases it has been cleared utterly in contrariety to the previously existing law, so that it can be summarily

stopped after the existing crop if any, has been removed. In other cases it may be possible to exchange it for land below.

(3.)—In cases where such cultivation is on steep places, codes of rules should always have a provision enabling the Deputy Commissioner to order the owners to build up or bank up, or terrace the land.

In other cases, the evil will cure itself. I have seen much cultivation in Hazára (*e. g.*,) that will cure itself. Every inch of soil will be washed off in 2—3 years, and probably a landslip or a ravine will end the story.

(4.)—In very bad cases of danger from landslips, &c., apply the principal of expropriation for indemnity.

Then assuming that we have got the line drawn partially, but as nearly as circumstances will admit, how is the treatment of the forest, bare land, and bushy or grassy slopes, of which it is made up, to be managed? If it is treated as strictly as a Government reserve, what are the people to do? If it is left open without restriction, it will become as bare as if it were cleared for cultivation, and be the source of all the evils which the clothing of forest is intended to prevent. How will the convenience of the people be met as it is by the "unreserved" or (permit or gradual destruction) principle?

I answer that you must manage the forest on proper principles, taking the *simplest, easiest* and least expensive method possible for the purpose; or in other words adopt the system of working by a plan, but reduced to its simplest and most elementary proportions. The management must be based on an actual examination and estimate of the stock of the forest, and the annual yield must be laid down for a few years, and the principal things to be done in the forest must be embodied in a written document, framed free of all technicalities, and deposited with the village forest official for guidance.

The document will simply state:—

(*a*.)—The number of marked trees which may be felled annually; these may be allowed to accumulate, but must never be exceeded, and they must be marked.

There may be permission to lop these trees and to bark them or bore them for turpentine before felling.

(*b.*) The parts of the forest from which grazing must be excluded to enable it to grow up.

(*c.*) The kinds of trees which may be lopped for fodder or cut for fuel, and the block or yearly portion of the forest in which this may be done.

(*d.*) The area of brushwood or coppice that may be cut.

(*e.*) The places and conditions of lime, "surkhi," and charcoal burning.

These simple regulations have to be carried out, and there must be a system of monthly reports by the village officials responsible.

All the produce of the forest so prescribed, all the grazing or grass cutting in the forest is to be at the absolute disposal of the village to use or sell exactly as they please.

There will of course be the usual code of general forest rules prohibiting forest offences, fires and mischief.

It is essential that a competent Forest Officer should be temporarily posted to the District (under the Deputy Commissioner) to examine the village forests, demarcate "the line" and draw up the orders for the yield and management of the forest. The cost of employing this officer, Government ought to bear, though ultimately a percentage may be taken on the forest produce. At first this ought not to be done in order to popularize the system, as before remarked. If this assistance is refused, it will be exceedingly bad economy, and can only result from a want of belief in the importance of keeping up the village forests, and from failing to recognize, that where we want to keep up the "massif" of forest, *we must only take out trees on a counting or valuation*, and that the attempt to take them out by issuing permits without such a previous check, is a radically faulty plan, applicable only, as before observed, where the area is very large and the population comparatively small.

A small forest establishment can be kept up for each tehsíl aided by the Revenue Establishments (of tehsíl Chuprassies, Patwaries, &c., &c.)

At first I would have it all paid for by Government so as to make no charge on the forest.

The control over the forests is thus compensated for by allowing the people to derive a real profit from it, and I wish it to be considered whether this profit is not as real an advantage to the people as the old method of leaving the forest free to them subject to permit-restrictions and the prohibition of sale or merchandise.*

It is only a question whether Government will prefer to secure the contentment of the people by incurring a very moderate expense, or will prefer to purchase that contentment by the destruction of the forest at no monetary expense to itself.

It would not do *at once* to charge a percentage on the forest produce; for that would take away the *quid pro quo.* We give all profits as a set off against the restraint.

If it is asked—"you say, there should be no charge on the forest *at first* why not permanently relieve it?" I reply that in time when people have come to appreciate the restraint as the direct cause of permanent profit to them, and when the results of fair management have been to increase the profits to a considerable extent, it may ultimately become quite right to maintain a better agency for supervision and require the forest produce to pay a share of the cost.

It is now time to consider how it is possible to carry out a valuation or counting of the forest, which is the *backbone* of the suggested system of management.

It may be done by various methods, but I recommend as a rule the adoption of the method proposed by Dr. Schlich,† *viz.*, laying out a line and measuring 50 feet on either side of it. On this space all trees should be counted. The linear samples should be so numerous as to be at least 2 per cent. of the whole area.

---

* An instance may be given from Hazára experience. The people have a sale for "Excelsa" bark; they can get Rs. 3 for the bark of one tree, but under the old system they may use for themselves but cannot sell,—therefore they have to pretend they want the trees, get a permit to cut, and then sell the bark quietly.

† This method was originally introduced by Dr. Brandis, and only modified by Dr. Schlich.—THE EDITOR.

I should for the present treat the trees by classes :—

(Not enumerated)	Seedlings	(under 1 hâth) = under 18″	—I class.
	Saplings	(1—2 hâths) = 18″ to 3′	—II „
	Young trees	(2—3 hâths) = 3′ to 4′ 6″	—III „
	Trees	(3—4 hâths) = 4′ 6″ to 6′	—IV „
	Old trees	(4 haths & over) = 6 & over	—V „

The following remarks of Mr. Amery, Deputy Conservator of Forests, extracted from the "Indian Forester" of July 1875, seem to me to be worth quoting on this subject. He writes :—

"The most important factor in this operation (*viz.*, counting trees) and that entailing the most labor is ascertaining the girth measurement (may be taken at breast height, or say 4 feet above the ground, B. P.), and this can be as well performed by a native writer on 10 rupees a month, aided by a chaprassi on 5 rupees as by the most scientific European."

"A party of twenty such couples, the writer armed with pen and ink at his girdle, and a book in his hand, and his assistant with measuring tape in one hand to help in measuring, and a paint-pot and brush in the other to mark the measured trees, would get over a considerable area in a day, chronicling the class and girth of every tree; while the officer in charge of the party would take and register height measurements for age-class (this we should not attempt, however, in the unreserved forests, B. P.), and stock his note-book with observations on the general condition of the block, soil, undergrowth, reproduction, &c., &c.; he should be attended by a couple of coolies, with a chain for the rough measurement of compact blocks of saplings below the minimum girth measured."

Mr. Ribbentrop has also described a method of counting in the Conference of 1872—(page 191,) but this relates to exceptional cases where *all trees* are counted. It may nevertheless be given.

"A line of men is formed consisting of alternate measurers and writers extending at right angles to the boundary line (of the forest, or of the block); the former takes the girth of the tree which he calls out, and the latter immediately enters it on his book. At the end of the line of men, a blaze line is cut on the trees by a marker. This line corresponds with the boundary line as they return."

Thus :—

Boundary.
I Measurer.
O Writer.
I.....
O.....
I.....
O.....
I .....
O.....
P. Marker cutting blaze line.

"Practice will make it an easy task as soon as the people become accustomed to the work."

The measurer for unreserved forest will only measure the trees of 2nd, 3rd, 4th, and 5th classes, the number of seedlings being noted generally. When they come to a patch of seedlings or poles, this may be described, or chained off.

If it is intended to disregard trees other than *conifers*, or trees of valuable kinds, the others will be omitted in counting, and a general note made regarding their abundance or otherwise.

A calculation of numbers will enable the entry to be made in the simple "working order" drawn up as to the number of trees to be cut.

The *one* real difficulty to be overcome is ascertaining the rate of growth.

We want to know roughly for unreserve purposes, in how long the counted number of old trees, will be replaced by an equal number of younger ones. Supposing x = number (counted and estimated) of old trees—*i.e.*, trees of a size admissible to cut, and a to be the number of years, requisite to allow an equal number of young trees to come to cutting maturity, the yield or number to be cut in a year will be $= \frac{x}{a}$.

When thinning has to be effected, it must be done on opportunity occurring of sending a proper forest officer to the spot.

What *size* the trees to be cut are, whether only 1st class or some of other classes,—will depend on the state of the forest. All trees to be cut must be *marked*, say for five years' cutting;

each year being one-fifth of the number, exclusive of trees of inferior kinds which may be cut according to general directions without limit.

Then the whole of the produce is at the disposal of the village.

Will not people gradually prefer this, to a power of user limited to their own wants, coupled with a total prohibition against making any profit?

The question which remains is, who is to get the income? If it could be made into a communal fund that would be *the* way to show people what the forest was worth.

First of all, the necessary firewood and other material is assigned by the community to the use of each person, and the rest is sold. If only a few rupees get divided out to individuals, they do not know what the total produce is, and they under-estimate the value of the forest accordingly.

If, on the other hand, the amount goes to a common fund, they can improve the condition of the village by building wells, tanks, "ziárats," schools, mosques, roads, &c., and add to their "malba" (or other similar common fund) for joint purposes.

This I firmly believe to be the only way of popularizing forest conservancy and improving on the system of handing over forests to be destroyed by unrestrained use.

The only objection that can be raised on the other side is that the system is not complete enough, to fully effect the object. I can only answer that half a loaf is better than no bread. The system must be reduced to the last limit of cheapness and simplicity, or it will not be carried out; and that even imperfect as it may be, the system is so much better than the old one, that it ought to be accepted as at least an instalment of right action, and may pave the way for greater exactness hereafter.

It only remains to express a hope that, when a survey and settlement party take up the question of reservation in Rawalpindee, in Jhelum, and Shahpore (the Salt Range) in Shahpore-Kundi, and in Kangra, they will set themselves not to consider only "blocks worth preserving by the State," but first deter-

mine a general forest line as nearly embracing the five conditions above specified as circumstances will allow, and *then* proceed to consider what part of that they will retain for the State. If the wants, rights, and privileges of the people are pressing, rather give the whole right and income to the *communal* body, than abandon the forest itself to destruction. If the rights of the State are so few that you do not feel justified in taking up any land—keep the forest and give its income to the people, but not its area to destruction as an "unreserve."

Remember also sec. 48—50 of the Punjab Laws Act IV of 1872, which provides that in all cases the use of natural products in Government land (*i.e.*, not land the proprietary right to which has been alienated) is subject to regulation.

APPENDIX.

WHILE these sheets were passing through the press, I received the "Revue des Eaux et Forêts" for July 1876.

This gives a summary of the new Federal Swiss law, published 29th April 1876, applicable to all the cantons of Switzerland or such parts of them as contain mountain forests.

It is to me a confirmation of the reasonableness of what I have urged regarding our own demarcation work, to observe how the provisions of this new law run.

After reciting (Art. I) the general surveillance of the Confederation over the forests in the elevated regions of Switzerland, the law goes on to indicate the cantons to which it applies; and in all these the local authorities in concert with the Federal Council, are to determine the extent of territory to be under general surveillance and within the scope of the law.

All state and communal forests in that area or extent of country, are under surveillance; *and also all private forests when they have the character of 'protective forests'* (forêts protectrices.)

By Art. IV, all those forests are defined to be protective forests, "which by reason of their elevation, their position on abrupt declivities, on culminating points, on ridges, on the brows of hills, on spurs, in the region of the sources of streams, in defiles, in ravines, on the banks of rivers and streams, or those which by reason of the otherwise insufficient forest-clothing, serve as a protection against climate influences, the ravages of wind-storms, avalanches, falling stones and ice, the detrition of soil, landslips and erosions, torrents and inundations."

By Art. V, each canton is to determine or effect a separation between those forests which are protective, and those which are not.

[I may here note in passing the *obligation* imposed by Art. IX, on the cantons, to provide for the formation of a sufficiently qualified staff of subordinate employés, by means of a course of instruction in sylviculture or forest management.]

By Art. X, all forests are to be demarcated (délimité) within five years.

Art. XI.—Within the demarcated limits, the forest area may not be diminished without orders of the cantonal authorities, and the sites of cuttings and blanks must be always replanted or reboised, unless an equal amount of land has been planted elsewhere. All clearing or breaking up of forest or cultivation is prohibited in protective forests, or in places where the clearing would endanger the existence of a protective forest in the vicinity.

Art. XIV.—Provides for buying out dangerous rights, which is compulsory, if the rights are incompatible with the existence of the protective forest. The buying out to be effected by money payment, or the exchange of lands.

No *new* rights can accrue in the forests.

Art. XVI.—Provides that the possible annual yield of the forest *shall* be determined, and cannot be exceeded without especial Government authority; and if it has been so exceeded, by authority or in an illicit manner, the yield of the subsequent year is to be reduced in proportion.

Art. XVII.—Deserves to be quoted at length :—

In forests for which it is not possible at once to lay down a complete working-plan (aménagement définitif), it is necessary within the five years following the promulgation of the law *to determine by a preliminary working-plan the figure at which the possible annual yield may be fixed:* also the mode of working, regenerating, and taking care of the forest.

Art. XVIII.—Provides that the cantons have authority to regulate the working of private forests under the circumstances which this law describes *(vide supra.)*

Art. XX.—Provides that all utilization of minor produce of such a kind as interferes with proper management, such as grazing, collection of mould and dead leaves, &c., may be either *confined to certain limits* (cantonné) suspended or suppressed altogether.

Arts. XXI, XXII.—Provide that lands which are urgently wanted to form important protective forests, may be planted on the requisition of the Government. If the land is private property, it is expropriated for indemnity.

The fifth chapter of the law, Arts. XXIII—XXVI, is taken up with the works which the Confederation will subsidize or assist with funds :—such are the instruction of persons to fit them for forest service, works of reboisement, &c.

The sixth chapter deals with penalties. That for diminishing the forest area is from 100—200 francs *per acre,* and compulsory replanting within a year; for exercising rights contrary to Art. XX, 5—500 francs.

The seventh chapter contains miscellaneous provisions with which we are not concerned. This abstract I have thought instructive, as justifying the remarks I have made, and showing how fully these principles are recognized in Europe.

Supply and Demand in their relation to Working Plans.

TO THE EDITOR OF THE "INDIAN FORESTER."

SIR,—I am anxious, as far as possible, to avoid aimlessly finding fault with views expressed by writers in your Journal, but one observation made by *Jangali Bulbul* in his remarks on Mr. Amery's article, which appeared in the July number of your Journal, appears to me to be so misleading that it must not pass without correction. If others have noticed the mistake, and have drawn attention to it, the publication of this letter will be unnecessary.

The remark to which I refer is on page 56, where *Jangali Bulbul* states that he is unable to see how supply and demand "can influence the working plan in any important degree." Surely every working plan in the world must have supply and demand for its very foundation. As I take it, and this in fact is exactly the same as what *Jangali Bulbul* himself says in the next sentence, the working plan has one simple object, namely, the regulation of the revenue. Certainly, its object is not the preservation of the forests. They are perfectly well able to take care of themselves as long as there is no cutting, no supply, that is, no revenue. Of course, I am only speaking generally, and do not refer to exceptional cases when forests are liable to be destroyed by avalanches or other natural causes. Only as soon as cutting commences is a working plan necessary, in outline at first, and then becoming more and more developed as the supply increases. As the areas cleared can be perfectly well re-forested without any working plans, it is clear that they are not prepared to ensure the continuation of the forest. Any one who knows the elements of the theory of price will understand why, whenever supply is in excess of demand, Government, as owner of the forest, is a loser by the transaction. It is indeed conceivable that Government should grow trees even at a loss. The loss would then be equivalent to, and as it were represent the price of, the advantages gained to the

country by increased rainfall, etc. But in point of fact this case is not likely to occur, for when there is any cutting there will always be revenue, and it is, exactly as *Jangali Bulbul* himself states, to bring about a sustained yield, in other words to regulate the supply to the demand and therewith the revenue, present and future, that the working plan is made.

Jangali Bulbul's remark is specially dangerous; because it shelves an important difficulty, and is, therefore, likely to become attractive to many who have not considered the matter. The real solution of the difficulty is, as is so often the case, most simple when once found. Supply and demand will adjust themselves as long as everything is left to take its natural course. But as soon as we come to laying schemes, and making working plans, our very first work is to study the supply and the demand; otherwise we do not know what we are making working plans for. This view is, I think, not opposed to those of B. H. B. P., contained in the first article of the same number.

Mr. Amery was in fact equally wide of the mark, though his mistakes were very natural ones, when he stated that in Germany the supply precisely equalled the demand, and when he added that in India the market was glutted by over-supply. Supply and demand are continually oscillating, and are never precisely equal to one another, excepting momentarily. This is especially the case with wood, which is always produced on a large scale. On the other hand, they are always approaching one another, and never remain very far apart for any length of time. After coming from the places of consumption where we are accustomed to look upon every piece of wood as worth so much money, it is very natural that we should feel depressed at seeing large logs decaying in the forest. But the feeling is very unreasonable. If the logs can be brought to depôt at a profit they will be sold, if not, they have no value, they have cost nothing to produce, and their going to decay cannot signify. They are, in fact, out of the market, and form no portion of the supply.

I remain, Sir,

Your obedient servant,

HUBERTUS.

Subordinate Forest Establishment.*

By C. F. Elliott.

It appears to me that the subordinate establishment in the Forest Department is not at all on a satisfactory footing, either as to the stamp of men employed, or their treatment, and duties, their relations with their superior officer, and with each other, &c., &c.

In the hope of opening a discussion which may lead to a greater uniformity in these points, I venture to make some remarks on the subject.

I. Beginning with Rangers, I would state my conviction that it is a mistake to employ Europeans in this grade. As a rule, Europeans who will take up these appointments, without hope, be it remembered, of obtaining any promotion, are such as have no respect for themselves, and fail to inspire any, in the natives in general, and their immediate subordinates in particular.

They are, almost invariably, persons utterly without education, and frequently not nearly so intelligent as natives on half their pay.

There is only one way of employing European Rangers in this country with advantage, *viz.*, where a definite stationary charge can be given, such as a timber sale depôt.

To place a European on Rs. 50 to 200 per mensem out in charge of forests, or rakhs, with an order to keep a general supervision over the whole, appears to me to be folly.

He will not travel about in the hot weather as a native can, and he will be probably no more observant, or intelligent than the Foresters under him; while it is utterly impossible, as far as my experience goes, to get out of any such person a report explaining the state of the forests, whether improving or deteriorating, whether fit to be further worked, or already overworked,† &c., &c., and he is totally ignorant of both English and vernacular names of any but the most common trees and plants.

* We print this paper, not because we agree with all the views put forward, but in order to invite discussion of this most important branch of forest organization.—The Editor.

† This of course is only necessary where no working plan exists

Therefore, supposing all the subordinate establishment to be composed of natives, I would make the Rangers' grades thus: Rs. 50, 75, 100, 150.

We have now arrived at a stage when our native officials should have a recognised status, as in the civil and police departments. Thus, I would make those on Rs. 50 and 75 equal in position to Deputy Inspectors of Police and Nâib Tahsildars: those on Rs. 100 and upwards, equal to Inspectors of Police and Tahsildars, and they should be addressed with the more respectful "âp" and receive a chair, &c.

There should be a greater difference in pay, than at present, between Foresters and Rangers, and between Foresters and Guards, while at the same time, there should be sufficient distance between the steps in each grade to allow of fair promotion.

Foresters should be graded on Rs. 20, 25 and 30, abolishing those on Rs. 15 and those above Rs. 30.

There should always be 4 classes of guards, *viz.*, Rs. 10, 8, 6 and 5, and a fair proportion of each class should be distributed to each Division.

I know of one Division in the Punjab, in which there are no men on Rs. 8 or 10. Thus the guard, who has been promoted to Rs. 6, has probably got to the end of his tether, as inter-divisional exchanges can hardly be made for men of this class, and it is not likely that a man on Rs. 6 is fit to be promoted at one bound to a Forestership.

II. It should be a standing rule that no man unable to read and write the local vernacular* well, should be promoted to more than Rs. 6 per mensem, and only to that for long service, or other special qualification.

Security should be taken from all native subordinates. The 3 lower classes of guards should give Rs. 100 each; the Rs. 10 class Rs. 250; all Foresters, Rs. 500; and the Rangers one year's salary each.

All security bonds should be registered in a recognised registration office to ensure their being valid.

---

* Urdu in Bengal Presidency, being the vernacular of the Court.

III. A Forest Ranger's duty, when not a definite charge, as a sale depôt or plantation, should be the supervision of two or more Foresters' circles, marking trees for felling, inspecting the Foresters' offices, seeing that the books and returns are properly kept up, moneys regularly paid into the Treasuries, &c.

The Forester is the person responsible for what occurs in his circle, which should, as far as possible, correspond with the Civil Tahsil. He should receive his orders direct from the Divisional Office, not through the Ranger, who can either have copies, or make himself acquainted with such orders by inspecting the Forester's office.

The Forester should receive the pay of the establishment under him, and be responsible for its distribution, see the felling and removal of the trees marked by the Ranger properly carried out, keep up whatever forms and registers are required, issue permits where necessary, collect revenue, report on all that takes place, and be responsible for the efficiency of the establishment under him: in short, the Forester is the chief executive officer in his circle.

To each Forester, I would attach a guard on Rs. 10 to be in charge of his office, his secretary virtually, to be always at the head-quarters of the circle. This arrangement provides for prompt replies to orders when the Forester is away in the forests, prevents the stoppage of such work during his absence, and also makes a sort of stepping stone from the guard to the Forester grade, enabling the former to become acquainted with the duties of the latter and so fit himself for promotion.

The guards on Rs. 8, 6 and 5 should have forest areas, not exceeding at the utmost 5,000 acres, apportioned out to them, the more difficult and important beat, of course, to the better paid. They should report themselves once a month to the Forester at his head-quarters and be responsible directly to him for everything occurring in their beats.

IV. The Forest Ranger should furnish weekly reports of his duties. For the Forester, monthly reports are sufficient, as every individual case is reported on separately.

The Forester's head-quarters being usually at a Tahsil town, for convenience of post, &c., pay is easily disbursed by having

letters of credit on each Tahsil. The Forester draws the cheque made in his name, and distributes the pay either during his tour, or when the guards report themselves at his office. The acquittance roll should always be sent in, duly signed, within a month of cashing the cheque.

In many divisions, the prosecution of forest offences forms a heavy duty: and this, I would entrust, as a rule, to Rangers, but when they are otherwise engaged, there is no objection to the Foresters, or in small cases, even the guard in charge of the Forester's office carrying out this duty.

Guards should not be allowed leave without providing substitutes. This is really no hardship to them, as they generally belong to the district in which they are employed and thus have friends or relatives who are willing to do the work for a month or so.

To Foresters and Rangers, I think, one month in a year may always be allowed, if necessary, without requiring a substitute, a small sum being deducted from the month's pay for the *locum tenens.*

The nature of the forest treated, the climate, and the circumstances in which officers of the Forest Department scattered throughout the length and breadth of India are placed, vary so greatly, that it is impossible to lay down in detail rules to suit every case, but general principles may, and should be defined. I, for one, shall be greatly obliged if other officers will publish the results of their experience.

Memorandum on Jungle Fires.

By M. J. Slym,

*Deputy Conservator of Forests, Salween Division, British Burma.**

1. There is a general belief among the majority of Forest Officers that these fires yearly do a great deal of harm to the teak producing parts of the forests, and considering what a number of seedlings must be either killed or injured by them

* We trust that the above memorandum will cause a vigorous discussion of the subject of fire protection.—The Editor.

annually, the current view would at first sight not appear to be entirely without grounds.

2. A great deal has been written both for and against these fires; many have pronounced their effects upon the forests to be unqualifiedly injurious; some even think that they must be prevented at any cost; while others believe that they act favourably towards the growth of the teak, and the Commissioners in Bengal are of opinion that these fires kill yearly a great number of injurious insects and their ovaries which adhere usually to fallen leaves, &c.

These views are naturally enough all based upon common sense, but the *pro* and *contra* are no where sufficiently elucidated. The first does not show how the fires could be suppressed without doing harm in some other direction, and the second does not disclose how they act favourably towards the growth of the teak; the Commissioners of Bengal mentioned only one important fact and overlooked all others, but of course it must be remembered that it is not the specialty of these gentlemen to investigate all the intricacies of such a subject.

3. Before entering into the bearings of this important question, I must first detail the causes from which the fires arise and at what time of the year they usually prevail.

The principal causes are :—

1. The firing of the Toung-yahs when high winds prevail.
2. The camp fires left burning by travellers.
3. The firing of the jungle for the purpose of driving out game.
4. The burning of the rubbish near the villages and gardens.
5. The burning of the forest near the villages to keep tigers and other wild animals at a distance or to frighten them away.
6. The cleaning of the roads and pathways by which people have to travel, which enables them to avoid snakes, &c.
7. The tradition of the hill people that burning of the forest has a salutary effect, kept alive by actual experience of the increased healthfulness of the districts after the fires.

8. In the higher regions of the hills, by the Karens travelling with torches during the night either when overtaken by darkness or to avoid the heat of the day.

9. Spontaneous combustion, a cause admitted by many, but which I have no reason to believe in.

4. It is hardly necessary to observe that the occurrence of fires is limited to the dry seasons, for they never occur during the monsoon. They usually begin in the month of February, at which time a great number of trees lose their leaves, but they are not violent before March or April, after the heat of the sun has dried the grasses and dead bamboos which are at other times saturated by the dew or rain.

5. It is no doubt easier to trace the course of mischief than to remedy it without at the same time doing harm in another direction. The first impulse has been to say "prevent the fires by keeping well-cleared paths round the forest tracts and have these watched during the dry season," but the question is, firstly,—Would this prevent them altogether over the whole of the teak producing parts of the country? Secondly,—What would be the cost of this fire tracing, as it is called, to the Forest Department? Thirdly,—What indirect effects have to be foreseen, which the change might bring about, and which might possibly lead to the development of a greater evil than the one to be obviated.

Fire tracing may be attended with success in some parts, but in some it will not; in others the object is at present partially attained without such expensive measures, for it must not be supposed that the whole of the forests is in a blaze every year; some parts burn regularly, but some are either free or slightly affected by fire for two or three years successively; and this explains why more trees are not injured, and how it is that we find such magnificent timber in the higher parts of our forests. Moreover, in as far as fires are due to the first cause, can they be prevented? Could Toung-yahs be interdicted? Never, for it is the custom and habit of the hill tribes, which must be allowed as long as they remain in existence and have to cultivate for their own support.

It is undoubtedly true that a path may be cleared around every *Yah*, so as, if possible, to prevent the fire spreading, and this may be serviceable when there is no wind, but usually in the month of March, or the time when these Yahs are fired, strong and high winds prevail which carry the fire great distances thereby igniting the dry leaves and grass. Could the guard at the outer fire-path of a tract to be preserved prevent the fire striking across? Single-handed, certainly not. If produced by cause No. 5, could it be expected that such a guard would be able to stop the progress of the fire? Could it be expected that he would remain day and night on his beat and that he should remain after sunset to be taken off by a tiger or other wild animal? The risk by day is already more than sufficient. The measure recommended for the keeping out of these fires may be successful with small forests like the Kalatop in India and in a tract without any main road or path-way, like the Sinsway in this Division, but I doubt their success with large and continuous forest like the Thoung-yeen, unless at a great cost to the State; moreover, it has never been tried yet, whether the measures recommended would answer with regard to the forests in these Provinces, for we are not dealing with pure teak localities but with jungles, which among other vegetation contain at the most 5 per cent. of teak only, amongst the different trees there aggregated, so that if the keeping out of these fires act beneficially towards the teak, it will also do the same for the preservation and re-production of the other kinds and produce a kind of struggle between the strongest and most rapid in growth of tree vegetation. Besides, it is a measure of which the good or the bad effects cannot speedily be perceived, for with every care, we shall hear now and then that some parts have been accidently fired, and this may give an opportunity to the old and usual springing up of teak seedlings in the burnt parts and so afford a confirmation one way or the other of the accuracy of the old or the new theory.

6. Before recommending such expenditure, we should have positive experience of the bad or good effects of keeping these fires out of the Burma forests.

The injuries done by these jungle fires are given as follows :—

1. They either partly or wholly kill the seedlings.

2. They burn and destroy the seed.

3. They char the outer bark of the young trees or saplings at their base, which part is in consequence liable to be attacked by insects.

4. They burn the humus and thus lead to the impoverishment of the soil.

7. The first reason is not groundless, for when the fire is violent, and creepers and rubbish surround the young trees, it often kills them partially or outright; they are then either lost or become worthless for the production of regularly shaped and sound timber; but, as I have already mentioned, it is questionable how far fires could be entirely prevented by the measures advocated. With regard to the second reason, I can only state that blackening or partial roasting of teak seed by a layer of leaves does not always destroy the inner kernel or germinating part of the seed, but as supposed by many, increases its germinating power and that the real destroyer of the seed is an insect which bores a minute hole into the shell and eats the inner part. This evil undoubtedly will also increase by the keeping out of the fires and allow the multiplying of the thousands of ovaries which otherwise would have been destroyed by the burning of the leaves to which they usually adhere. As to the third reason, it is a well-known fact that this is not the cause of the beetle holes found in timber. In full grown trees these beetle holes are found over the whole of the surface from its base to the top, and with regard to the Forest tracts in my Division, the wood of which is subject to this defect, I am in a position to controvert the argument, for I have seen many a good squares sawn from logs marked with beetle holes. This shows that they cannot have penetrated further into the tree than some 2 or 3 inches, and that it must have been attacked when of a large size. Again if the fires had anything to do with these defects in timber, why is it that certain tracts only produce timber with this defect and not the whole of the Division, it being understood that jungle fires rage in one part as much as in the other? Or why is it that timber from some parts of the Foreign States never show these defects, where jungle fires are unrestricted?

Moreover, charring is known to have a conservative effect and would prevent rather than encourage the attack of insects. I now approach the fourth and most important source of injury done by the jungle fires, one with which it is less easy to deal, presupposing as it does a knowledge of the chemical changes which fire produces in the organic and inorganic matter upon and in the Forest soil.

8. Before going into detail, I may draw attention to the simple practical lesson regarding the effects of the fires and the ashes produced by them upon the Forest soil with respect to Toung-yah cultivation. What would such ground produce when simply cleared, without being well fired and having a large quantity of ashes deposited upon it? It is by the agency of the latter that a good crop is ensured and should it happen that such *yah* caught fire before the intended time, when the debris is thoroughly dried, that is, if the ground has been inadequately broken by an insufficient heat and the unburnt part of the trees have supplied an insufficient quantity of ashes, the prospect of a crop is either wholly or partly lost.

9. It will not be out of the way to quote here a few lines of Dr. BRANDIS' Forest Report of Pegu for 1856 (page 154)—"We must, after describing the disadvantage of the Tough-yah "cultivation system, not omit to state that in some respects it "may also have its advantages. In the Prome District on dry "hills near the Northern Nawing, the burning of the trees "and shrubs for Toung-yahs cultivation does not create a mass "of low dense jungle as in other parts of the country. There, "on the contrary, the fertilising influence of the ashes has "another effect. An unusual abundance of young trees are "found on deserted Toung-yah, among which there is generally "a due proportion of teak." Dr. BRANDIS, of course, saw in the Nawing Forest old Toung-yahs which must have been at the least 12 years undisturbed, the others he saw in other parts and alluded to as dense low jungle, must have been three to six years only laying fallow—after twelve years in almost every instance a young Forest has been created anew, and which, if left undisturbed for about thirty years, will have entirely passed out of the condition of a Toung-yah poonsoh.

What holds good for the growth of paddy will, of course, hold equally so with regard to Forest trees; many a forester will have noticed the fine teak saplings which spring up from almost every burnt heap and near every burnt log of wood. This shows clearly that vegetation derives some benefit from these fires, nor must the beneficial effect they exercise upon human life be forgotten, one, which advocates of fire conservancy sometimes leave out of sight completely. Our Forest atmosphere is charged with gaseous products of decomposition injurious to the life of men and animals, by the increase of which the air would become infinitely more deadly.*

10. Our Forests are unhealthy, and it is an admitted fact that conflagrations alter the condition of the atmosphere and act beneficially by promoting the healthiness of the locality. They either drive the noxious air away or alter the condition of it. Even under present circumstances, heaps of rotten humus leaves and rubbish are found in the valleys or hollows of the hills, which have been driven down the slopes by the heavy rains and wind; this will be the same under the proposed system, for it is not correct to suppose that the fallen leaves and woody matter would then remain on the slopes of hills or high ground, for not only does the rubbish wash away but also the soil itself. During my four years' continued stay in the Forests, I have observed many a blown down large trees with barren rock below it, which shows that at the time the tree germinated this rock must have been covered by several feet of soil. More is accordingly gained by allowing the leaves to burn where they fell, for the ashes would fill up crevices caused by the heat and when the rain set in would be at once taken up by the soil.

The ashes of woody fibre are valuable as manure, for they return to the soil the mineral ingredients which were removed from it by vegetation and of which they form a part. Hence the

* In the air at home carbonic acid gas is found to the extend of $\frac{1}{1000}$ part only, but in Burma where rotten leaves and vegetable matter are more abundant and heat and light, the promoters of this gas in combination with the oxygen of the air, are much stronger, the quantity of this gas must already be under present circumstances twice what it is in Europe. However in that quantity it has hitherto only slightly affected in some instances the life of the people as the luxurious vegetation of this country acts favorably towards the absorption of it, but by increasing the present quantity, poisonous fevers and other kinds of epidemics will be sure to follow as a consequence.

burning of leaves, fallen trees and dead bamboos renders soil more fertile, for it not only furnishes a considerable amount of mineral manure in a *readily available form*, but it also assists materially in disintegrating the felspathic constituents of the soil which are then more readily acted upon by air and moisture after being thus exposed to a moderate ignition than when present in their natural condition (Toung-yah cultivation). It must also not be forgotten that as plants have no power of locomotion their food must be universally distributed and that this is more practicable with manure in form of ashes than otherwise, for it mixes sooner with the upper soil, whereas a heap of leaves may be driven into the hollows only.

It may be objected that by burning the dried leaves and wood the organic constituents disappear and the inorganic part or ash only is left. This is true, but the office of the former, *viz.*, of disintegrating the crude mineral constituents of the soil, is partially rendered unnecessary by the return to the ground of the mineral food of vegetation in a form admitting of direct absorption.

11. The chief benefit of keeping the leaves unburnt is to protect the upper soil from being exposed to the heat of the sun, thus keeping it moister than it otherwise would be; but the leaves of teak trees and many other kinds which fall during the months of March and April, are not well-suited for the purpose, nor are they also easily converted into mouldy manure (containing carbonic, humic, weak nitric and other acids). This too is such a tedious process extending over many years that in the meantime it is almost certain to get fired once.

12. Forest soil in Burma differs greatly from that in other parts of the world, which makes it highly important to first experience the possibility of carrying out the proposed alteration, and its effects, if found feasible, as well as to study the likelihood of possible encroachments of trees, forming Forest of a more moist type, upon the teak producing localities, before altering that which has proved sufficient for many centuries.

I may here also note that in this Division the Mittegate Kyouktaga Forest, formerly an extensive and most valuable teak tract, has been entirely transformed into evergreen Forest,

as it is called. A few large and very old teak trees are still standing, but nearly all the remaining are dead trees found lying in the grass and rubbish. This number of fallen trees is so great that several years' working has not been able to remove the same, and not a single middle-aged tree alive or dead or seedling is to be found anywhere. Other instances of this nature have been observed by Major SEATON in the Upper Thoung-yeen, near the Pawpee stream and elsewhere, and have been recorded in the Conservator of Forests' Report, for the year 1865-66 (page 5),—and the Inspector General of Forests, in his remarks on the Forest Report of 1864-65, wrote thus :—
"This change is of no small importance considered as a ques-
"tion of Conservancy and of Finance, and it might be deemed
"worthy of special and scientific investigation."

Time has taught us that it has become the more important as the present fire tracing arrangements are favorable towards the alteration of the Forest soil—by moisture or otherwise.

13. It must not be supposed that all the dead and injured trees found are due to these fires; I have found many injured by creepers and many dead seedlings, which were injured by a small beetle boring a minute hole into the stem, so as to get access to the pith of the tree, where it feeds and deposits its eggs. These insects would have also a better chance of multiplying than now. This shows that the opinion of the Commissioners in Bengal is not altogether groundless. The Inspector-General of Forests refers to these destroyers of Forest trees in his Circular No. 1, dated Simla, 23rd June 1866. The keeping out of the Forest fires would not remove these causes of destruction; and picture the evil that would ensue from the accidental ignition of several years accumulation of rubbish, a danger that will always be present so long as the material remains undestroyed as has now been shown by the Kyekpyoogan plantation. If a young seedling is destroyed by fire the first year, the next season a shoot usually springs up from the root, which in one rainy season is just as tall as the original tree would have been in two seasons if left undisturbed,—a fact also liable to be overlooked and which shows the effect of fire upon the growth of teak.

14. The collective inference I draw, is that these fires should not be prevented *entirely*, but the strength of them sufficiently lessened to lessen the harm. This can only be effected by firing the forest ourselves, two or three times during the dry weather, commencing in the beginning of February, before the leaves are so thick on the ground, as in burning to cause an injurious heat to the trees; while in each interval the quantity collected would be insufficient to cause any harm. Those engaged in firing the Forest could clear the young and old trees from creepers or any vegetation endangering their growth.* I would also recommend the burning of all dead bamboo tracts, and afterwards casting over the surface a large quantity of teak seed; the bamboo may spring up again, but the kind we find on the hills, usually grows in clusters with sufficient room between them to allow the growth of teak saplings. If these belts of dead bamboo with which our Forests are periodically intersected are left unburnt, millions of the seed germinate which otherwise would have been destroyed, and the country becomes such a wilderness there is no chance left whatsoever for the springing up of a teak seedling amongst the bamboo, besides the ground being covered by rubbish and the teak seed being large, the latter remains on the top of it to rot, and the smaller kinds of seed which penetrate this rubbish and come in contact with the ground have a better chance to germinate. It is perhaps this process to which Colonel PEARSON alludes at page 405, of the "Indian Forester" for April last:—"In the Boree Forest of the Central Provinces, where fires have been put out for many years, it has been found that at least one hundred seedlings of the Dalbergia and Pentaptera spring up for every one of teak."

The measures recommended by me for lessening the injurious effects of the jungle fires, if kept up for about three seasons, would give certain results and prevent the damage done by excessive heat, but the present system is all but impracticable, and at best dangerous as it may, as already shown in the few

* These creepers constitute two of the greatest causes of inferior and irregularly shaped timber, as they kill the leaders of the seedlings and saplings, while the rubbish and dead leaves adhering to them, also break the seedling in two and give rise to forked stems.

lines quoted from Colonel PEARSON's article, drive the teak out of the enclosed parts altogether. It is of course fortunate for the existence of the teak and the interest of Government, that notwithstanding any expense and care these fires will occur now and then except in small and compact tracts.

15. The only certain way for the Government to secure a supply of valuable teak is by the making of plantations on a large scale; with these the Government will know what it has for its money, and out of such plantations the fires can be kept with very little cost, and with definite certainty, and there will be no interference with the custom and habits of our hill populations.

*** This memorandum was written by me some time back, and read at the Rangoon Forest Conference in 1875; but, I was there informed by the President that it could not be recorded, neither could the reason for doing so be mentioned, although it appeared to be generally admitted as worthy of consideration.—M. J. S.

The Political Value of Forest Conservancy.

IN our number for July last we considered Forest conservancy from its popular point of view,—the ideas which the people and the authorities over them had concerning Forestry, and the consequences to the Forest area and its preservation which resulted from the prevalence of such ideas. Our present brief remarks are concerned with the important aid which Forest conservancy may give to a Government situated as the British Government in India is.

It will be admitted on all hands that any Government to be of real benefit to the country must be a strong Government; and it follows from this that everything which (legitimate in itself) tends to strengthen the Government is a good thing and everything which weakens it, is in itself bad.

Forest conservancy starts from a basis of property. You cannot conserve a Forest or the Forest area of any district, unless you have either an absolute or a more or less limited proprietary right in it. It is obviously unnecessary to mention those exceptional cases in which the State interferes to some intent with a completely private property in order to benefit, or protect from injury, other adjacent properties or the whole of a district or country.

Leaving such exceptional cases aside, the moment the Government sets about conserving a Forest it asserts its property to that Forest, its absolute property or "dominium"—its burdened property, or its merely partial property, as the case may be.

This right has always existed in theory before the proposal to conserve has been made, for otherwise the case is not one of ordinary conservancy, but is an expropriation for indemnity of private property for a public purpose. Now if people see that directly the Government attempts to assert its right and transfer its property from theory to fact, they can always over come the assertion by clamour or complaint, the result is a direct weakening of the State power. The oftener such right is practically overcome the more bold will persons anxious to overcome it, grow. At first that class of State rights which are derived from long practice of former Governments—traditional rights in short—will be put aside; then the direct declarations at settlement, terms of "sanads" or grants, orders in official correspondance will follow.

The mischief is that when Government rights are given up in this way because of mere clamour or complaint, the *people never regard it as a gift or boon granted to them, but regard it as a practical triumph on their part against the inimical power of the Government:*—Hence no gratitude or increase of attachment and fidelity to the Governing power result, but only a hatred of and opposition to the Government Forest officers. This may be verified in any of the unfortunately numerous cases, in which on a mere clamour being raised, the most necessary Forest restrictions have been removed, and whole areas of Forest land abandoned; in no single case can it be shown that the people are grateful or look on the concession as a *gift* to which they were not entitled, but which they have received as a bounty.

It may be here urged that you cannot tell when the shoe pinches till it is put on, and the pressure causes the wearer to cry out. We do not urge that in no case are mistakes to be remedied, or that in no case complaints are to be attended to; but that in such cases alleged mistakes should be remedied

after full enquiry and in such a way as to leave no doubt that it is regular recognition of right, by a power that is based on a respect for right, and that if it is a concession for convenience sake, it is a grant of kindness, not the yielding of weakness.

The not unusual course observable in these days, is something like this:—A high authority is out in camp on a tour of inspection, the people who hate (as we showed in our former paper) *all* forest conservancy of any and every kind, think they have now a chance, and they present a petition setting forth all manner of grievances; the said authority immediately rushes to the conclusion that it *must* be genuine, and immediately orders a relaxation which, as it is not based on specific cases of proved distress, must necessarily be vague and general, and being vague and general is taken by the lower orders of officials (to whom the execution of protective measures is confided) to mean that they are not to interfere at all.

The local authorities, as we have already seen, have rarely had any opportunities for understanding anything of Forest economy; they have often never heard of the local and protective influences of forests, or possibly disbelieve them; they cannot trace in the comparatively slowly produced denudation, the injurious effects of trespass, fires or grazing, nor can they realize in anticipation, the future good forest, which slowly and perhaps imperceptibly advancing improvements of the estate will one day result in. Their first impulse is "peace at any price." They therefore give a ready ear to every complaint, and no consideration appears them so weighty as that every one should be quiet and content regardless of what that quiet and content cost. Their action is that of an attendant who quiets a crying child by putting into its hands some object of great value regardless of the probability of its destruction.

We have recently seen an instance of an otherwise intelligent officer, wishing to give up wholesale to a local magnate the rights of the State in a valuable property of enormous extent, and so situated that its local influence in a mountain country is inestimable, and that in direct defiance of the terms of the

"sanad" or grant by which the person interested held his estate, and the uniform practice of twenty years! And all this because the one idea struck him that this local magnate ought to have an equal position with certain others in the same district whose Forest area being comparatively unimportant and very small, was not claimed by the Government to the same extent as the former. Now such a course is direct weakening of the power of Government. It is a significant proof to the grantee that the solemnly worded document which he holds, means nothing, and insinuates not a little, also that the power who gives the "sanad" had really nothing to give, and that he was only *getting back his own*, which the State, either conscience-smitten or from inherent weakness, was unable to keep back. That the merest risk of producing such an impression, or of allowing such an idea to arise in the mind, must be avoided, is obvious.

The truth is that Government as a proprietor cannot safely allow what a private owner would not. In what sort of respect would that man be held, who allowed his fences to be broken down, his fruit to be gathered, and his fields to be trampled, and that in defiance of notice boards prohibiting in stately terms the trespass, and assuring everybody that he was the sole owner? Would he be called benevolent and paternal, would he be respected as one who had the right but who kindly and knowingly allowed the usufruct to his poor neighbours? Not at all: he would merely be laughed at. Why so? Because of his assertion of right and of the foolish and unnecessary way in which he allowed it to be over-ridden.

The people are fully aware that in Kulu and Kangra and Rawalpindi and hundreds of other districts Government has ever since settlement asserted its right to the forests; there is no undoing that; if then that asserted right is practically "let go" without consideration, or given up at the first breath of clamour, without true enquiry and a regular vindication of equity and fair dealing, it only makes authority despised.

But again, the existence of recognized Government estates protected by Government servants and visited from time to time by higher officials, are so many centres of influence, by which the power and reality of the strong Government may be felt.

If they are constituted fairly in the interests of the public on the well-known and previously published basis of State right, they are so many evidences of settled purpose, recognition of proprietary right, and of stability of authority, in the eyes of the people.

The characteristic of a weak Government is a fitful strength in and despotic hold of its capital and the territory closely adjacent, with a merely nominal control, which every body may practically defy, over districts further off. The existence of well-ordered and protected forest estates in the farthest and most out-of-the-way places demonstrates that completeness of control extending to the farthest verge of the State domain, which characterises a strong Government. In such distant localities there is often no other tangible proof of the Government power: and all Government officials being equally interested in the maintenance of order and public security, irrespective of their more specialized deparmental duties, their presence is at any rate an indirect check on crime and disorder.

Lastly, when such well and firmly constituted forest estates are made the means of comfort and progress to the adjacent populations, they are an additional source of support to the Government. From them issues the timber that builds the bridges which connect the sides of otherwise inaccessible valleys, from them the villagers derive their building material, to them they can look for an ultimate resource in case drought has destroyed the ordinary pasture lands; and when these conveniences are made available in an orderly and systematic manner, as distinct gifts of a power that might, as far as right is concerned, withhold them, who can deny that the people will feel that these things *are* gifts and so acquiesce gladly in the presence of a power, which, while it maintains its own in the interests of the whole country, gives what it is right to give, to the local requirements of the neighbourhood?

Some persons, who have had the patience to read thus far, will be ready to exclaim, "Well, but is not a very liberal dealing with people in the matter of Forests, essential? Can we afford, in our position, to risk a great amount of popular discontent for the sake of the forests; and would it not be better to let our forest

estates go altogether than have people discontented on account of them?

This contains, of course, a large amount of what is true; and it is on this account that it is likely to be extensively misused. In the first place, it means a very different thing in the mouth of one ignorant of the utility of forests, to what it does in the mouth of one who appreciates *all* the interests concerned.

A considerable number of officers know of nothing of what is called "Forest economy."* They either do not care, or do not know, that a forest is a necessary part of the organization of a country, just as drains are of a city; or they merely say the "theory that forests are useful—is vague and doubtful,† and if there is a more palpable necessity for railway fuel or timber they believe somehow or other that it will be all right, and that coal and iron may replace wood:" besides this theyare largely affected with the tacit belief that anyhow it will last their time—for forest destruction does not go to completion in a day. And thus they think to keep things easy and quiet, by giving up all Government interference, as they call it; then it is that phrases, such as those I quoted, are used: and that being their real meaning, it hardly needs argument to point out their error.

How should we act in a matter in which we *do* earnestly and practically believe?—*e.g.*, in the case of suppression of "satti" or in preventing cholera or small-pox? We do not there think of giving up the point; we say that the evil must be suppressed, come what may, and cast about to find the right way of doing it. That is exactly what I urge for forests. *There never was political danger in doing what is right and for the real benefit of the people, be they never so ignorant of the advantage.*

With forest conservancy you have the additional difficulty that it is, and always was and always will be—at least for an indefinite time to come—not in this country only, but in every country, unpopular among ignorant peasants, and interested people who might know better You cannot therefore be popular, but you

* A cheap little book by Jules Clavé: "Etudes Sur l'économie Forestiere" (Guillaumin-Paris) ought to be in every one's hands.

† It is wonderful how many ignorant people say this—because they happen to have vaguely heard that some claims, like that of increasing the rainfall, are doubted or denied, they extend the denial to the whole subject of local influence!

may be *just*. It is not justice, but weakness to give up all that the Government has claimed and all that it derives from preceding Governments.

In every forest settlement justice is to be aimed at first; and then as I have said, there are a thousand ways of diminishing the odiousness of forest restrictions. Once secure your estate and provide that it can be so managed as to be kept in a state of improving or at least of undiminished productiveness, and you may be as liberal as you like with the yield. Directly you go beyond this and think to please people by giving up the estate to destruction, allowing such grazing without restriction, such cutting as permits no reproduction, and you are doing an injustice. You may stave off present complaints in *your* time, but you will not save greater trouble hereafter. In another sense than the Roman writer intended, you may "make the place a desert and call it peace."

No Government right should ever be let go where it is not judicially and honorably abandoned as really not being a right at all. And this can *never* be done when Government has openly claimed the right for years, so that the clamouring people themselves would be bound to admit that they knew of the claim.

If an additional facility for grazing or for wood, or lowering of prices or some other concession is required, this can always be effected without injuring the State prestige; and care must be taken to see that it *is* done, *without detriment* to the *right* of Government and without practically amounting to a destruction of the forests.

What a difference does this present to the "laissez aller" policy, too often advocated in the interest of "keep things smooth" and too often it is to be feared, practised in our dealings with the people in many parts of India. It is not the least of the benefits which a forest service can render, that it helps strongly to hold on to Government rights and to put a useful drag on the purposeless—or easy-going—or over good-natured granting away this, that, and everything; and above all opposes giving in to clamour as clamour, without enquiry, and without a recognition of the rights of the State and of *its* object, as well as the object of the clamourers. Some persons seem to

consider that injustice to Government (which means injustice to the country as a *whole*) does not matter, as long as injustice to the individual or the local community (*i.e.* to the *part*) is not done.

To render efficient service in this direction the forest officer must, as one of his chiefest subjects of study, familiarize himself with the local tenures, the land system, the social history, habits and customs of the population, and with the nature of settlements, and in fact with the whole course of action of the State, in its relation to the country over which, as regards its forest area, he has charge; he must show by his practical and fair appreciation of local requirements, that he is a supporter of the State right, not from a narrow departmental basis, or from a desire to grasp a large revenue which will look well in the Annual Tabular Statements, but from a conviction that he has to strengthen the Government he serves, and make its power for promoting right and equity, the public health and the public safety against famine, felt and appreciated.

B. H. B. P.

II. Reviews.

Oil Seeds and Oils.*

This is a report similar in purpose to the report on gums and resins which we recently reviewed. It does not present the same scope for detailed criticism, as the substances it deals with are fewer in number, and simpler in character, most of them being largely grown and well-known articles of export.

In the case of gums and resins, we have a vast number of little known substances, often of doubtful identity, and the question arises what trees really produce certain marketable gums; then also arises the question how far it will pay to collect and export products which have to be gleaned here and there from individual specimens scattered over a vast extent of country, and then conveyed to the sea-board. Many gums and resins which, offered in small selected samples, exhibit promising qualities as drugs, or elements for industrial manufacture, can in practice only be obtained in limited quantities and at a cost which prohibits remunerative export. Hence the study of gums and resins is in many instances one of purely botanical or scientific interest, though it may turn out in the course of such enquiry, that some hitherto undiscovered quality appears in some particular product which richly rewards the abstract enquiry.

In the volume before us, there is much more scope for valuable statistics and commercial information, and these are freely and judiciously supplied.

An interesting introductory note on the nature of oils and their chemical and practical characteristics is given, and the classification is explained.

Of the fatty or expressed oils we have a natural classification, according as the substances resemble wax, are solid or semi-solid fats or are fluid. The fluid oils are again sub-divided, according as they are used for eating or cooking, for burning or in

* Report on the Oil Seeds and Oils in the India Museum, produced in India, by Dr M. C. Cooke, 1876.

medicine, or possess the property of "drying" under certain treatment, in which case they become peculiarly valuable to the painter and varnish-maker. A second great division of oils provides for those that are volatile or distilled, of which the "attars," including the well-known otto of roses, are samples. Some volatile oils are not used for scents, but as medicines. Most Indian collections exhibit under the latter head a large number of medicinal oils, which are not true distilled oils, but are merely sweet or edible oil, flavoured or impregnated with certain medicinal substances. No animal oils are included, nor are there many in use in India. Tallow is used for candles and soap. Bear's grease and tiger's fat, or leopard's fat, are occasionally prepared for medicinal use, and in the Punjab exhibition two fanciful curiosities figured, *viz.* "oil of scorpions," supposed to be a cure for scorpion bites, prepared no doubt by boiling scorpions in oil; and what is called "raughan-i-pín" or pelican oil, a yellow limpid oil which was sent from Dera Ghazi Khan. The pelican is found on the Indus, and its bones and flesh boiled down yield the oil.

A blistering oil prepared with a small red insect called bhírbútí, apparently resembles our cantharidine oil. We may also notice two very disagreeable oils obtained by the destructive distillation of wax and of egg-shells.

Returning to those oils which appear in the catalogue, we may notice as regards nomenclature, the same series of misspelt names as in the previous report. It is most astonishing that, in a language which can hardly be said to have any fixed value for its vowel sounds (which, *e.g.*, represents by one combination "o u," the various sounds in *poultry*, *through*, *cough*, *plough*, *rough*, *dough*,) in such a language it should be attempted to spell Indian names phonetically. It is true that some people object to changing the spelling of words which have become familiar; but this argument holds good *because* the words are familiar, and is not on the ground that it helps people to pronounce unknown words. That the system, or rather want of system, followed in Dr. Cooke's report, fails to do this, could be instantly proved by simply asking any one unacquainted with the native names, to read the names on a page of

the Report: he will mispronounce seven out of twelve. The only system possible is to adopt (as shown in our late Review) a simple fixed value to every vowel, distinguishing the long and short, or broad or curtailed sounds by accents. The consonants are left to take care of themselves; represented by their nearest English equivalent; though of course the use of diacritical dots or points to distinguish the different kinds of "d," "t," "r," "s," "k," &c., &c., would be, in cases requiring special accuracy, desirable.

With regard to the different classes of substances, we have first waxes. The *Rhus succedanea,* a well-known hill tree, is said to yield from the slightly roasted and crushed seed, a white wax. We should be glad to learn if any one in India has ever seen this product.

The pethá—or *Benincasa cerifera,* the beautiful transparent fleshed gourd, from which the well-known Delhi sweetmeat of the same name is made, is said to exude a wax on its surface. We have never seen this substance, and were always under the impression that the plant was called "*cerifera*" from the resemblance of the substance, especially when boiled, to translucent white wax.

Among vegetable fats, the *Bassia* butter of Kumaon holds a prominent place.

The *Excœcaria sebifera,* formerly called *Stillingia,* the tallow tree, furnishes a good instance of products which distance from sea-port renders useless. It grows like a weed in the lower hills of the North-West, flourishing in the Dehra Dún, and also in Kangra and Abbottabad further west. As far as we are aware, no tallow is ever extracted, except by way of curiosity. It is said that, besides the tallow which is contained in the capsules, the hard black seed itself when crushed yields a fluid oil. The tree is chiefly grown for ornament, and its lovely autumn tints, including purple, yellow, and crimson, render it deserving of this favor.

The medicinal oils do not call for much attention. That said to be derived from the seed of the onion, is probably only a sweet oil flavored with onion or garlic juice (p. 20).

Under almond oil, the vernacular for *bitter* almonds is given.

"Bádám" (not badam) is an almond generally, bádám tal*kh* is a bitter almond, and B. shírín or míthá bádám is a sweet almond.

Under *Anamirta*, the synonym—bacaen-ka-phal (possibly bakain-ká-phal)—is, we think, incorrect (p. 23).

There is not the least reason to believe that the seed of the "kachnár" (*Bauhinia variegata*), or those of *Bombax malabaricum*, yield oil (p. 27).

We have to note always additional words signifying "seed," just as in the gum and resin catalogue we found additions indicating "tree."

The native names for the different kinds of mustard and rape are all mixed together. In the North-West of India at any rate, sarsoṅ or saroṅ is applied to *Brassica campestris*, and ráí or túriá to *B. juncea*.

Tárámíra (or Assú *Pji*) is another mustard oil (*Brassica eruca*) but put under *Eruca*, and therefore separated by some pages to meet the exigencies of alphabetical arrangement.

The oil from the seeds of the dhák (*Butea frondosa*) (p. 31) requires investigating. We have never heard of such a product though the tree is common enough.

Passing to page 49 we would invite forest officers in the Himalayas to enquire and inform us about the seeds of the *balsams* (Impatiens): these during the rains are abundant in many species; covering whole hill sides with often rank and luxuriant growth. We have often heard of the seeds being collected for oil, but have never seen either the seeds or the oil. Samples would be particularly acceptable.

At page 52 a long and interesting account of linseed oil is given. The native names are strangely spelt as usual: those given as Persian are really Arabic words put into Persian form. Dhún-ul-katán or zún-ul-katán is the Arabic form. *Absi* is a clear misprint, and not a synonym, for the invariable "Alsí" used all over Hindustán.

Linseed oil is the chief oil that has the property of becoming a drying oil when boiled down (or allowed to ignite and burn) till its volume is reduced.

Under *Melia, sp.*, p. 57, the same defects are observed as

in the gums and resins. What is the difference between *Melia azedarach and Melia sempervirens*? they are the same tree.

The oil of sohánjna seed (*Moringa pterygosperma*) (p. 61) appears to require investigation.

Under poppy seed (p. 64), the common native name for the seed "*kh*ash-*kh*ás" is not given.

The *Prinsepia* (p. 66) (Behikar or Behkul, not baëkar) is found in the Punjab hills at 5,000 and 6,000 feet elevation, and is certainly used for oil locally, but not for export or in large quantities; the plant grows wild on fallow hill sides, &c.

At page 67, it is said that no seed or oil of the apricot is in the Museum. This can easily be remedied. The oil of apricot seed is *the* common every-day oil in Kulu, the Sutlej, Chamba hills, and elsewhere.

At pages 74 and 75 the Arabic names of sesamum and of the sál (*Shorea*) would puzzle better Arabic scholars than we are. As no sál tree grows anywhere near where the Arabs ever came, it is difficult to know how a genuine Arabic name for it could exist. Eng-gyeen of Burma is *not* the *Shorea robusta*.

Will officers in charge of sál forests find out whether oil is ever made from the seeds and send some of it?

At page 77, there is no reason to believe that teak seed yields an oil. The wood oil of teak is a substance not within the scope of the report.

The Inquirenda at the close of the report, must be referred to COL. BEDDOME.

B. H. B P.

Lac: Production, Manufacture and Trade.

By J. E. O'CONNOR.

THE present is a revised edition of an interesting pamphlet published by the writer about two years since. It contains much new information, and a set of carefully prepared tables in connection with the trade in shell-lac and lac-dye, which were not available when the first edition was written, and the memorandum may now be said to record nearly everything of useful importance relating to the subject in question.

The production of lac, when carried on artificially, appears to be a simple undertaking, and to be conducted in much the same way in different Provinces. Briefly, the method practised is that of applying a few twigs or branches, on which lac encrustations or cells have been deposited by the "Coccus Lacca," to the new trees desired to be brought under cultivation, care being taken that the trees so treated belong to one of the many species for which the insect has a proclivity, and that the seed-lac is applied to them at the proper season. Mr. O'Connor gives us separate descriptive accounts of how the above process is carried out in several different parts of the country, and we believe we are correct in stating in a general way, that all the raw material has up to the present time been collected or produced by private individuals.

From a table published on page 39, we learn that the foreign trade in shell-lac, the manufactured article, has developed very rapidly during the last ten years, increasing from 36,653 cwts., the quantity exported in 1866-67, to 80,645 cwts. in 1875-76; and that within nearly the same period the market price of the article has fluctuated in an extraordinary manner. In 1865, a maund, weighing 82 pounds, of fine orange shell-lac realised Rs. 30, which price fell to Rs. 24 in 1867, rose rapidly to Rs. 94 in 1874, and fell again to Rs. 51 during the early part of 1876. This fall in prices appears mainly to have arisen from the market becoming temporarily overstocked, the result of a rush to supply an article for which there was a brisk demand and in which rapid and large returns were obtained,—to competition, arising from the establishment of new firms, and also partly to the inferior article presented for sale. During the year 1875-76 there appears to have been an increase in the exports of 13,000 cwts., and it is said that this increased demand, coupled with the previous high prices, encouraged adulteration to such an extent, that the so called lac, in many cases, consisted of 50 or 60 per cent. of ordinary resin. On this subject the writer has the following:—"The effect of the great demand for shell-lac and the excessive speculation in the article during the last two years are shewn in the figures representing the exports for the official year 1875-76. Since then, however, there has been a

corresponding reaction and depression in the trade, and prices have fallen, as will be seen from the table printed on page 55, from a maximum of Rs. 97 a maund and a minimum of Rs. 53 per maund in 1874, to a maximum of Rs. 57 and a minimum of Rs. 22 per maund in 1876. It is not probable that this depression will be of long continuance; but those who are interested in the trade might do well to take warning by the fall which has occurred, and bear in mind not only that it is possible to overstock the market in a period of feverish excitement, but that unreasonable prices may cause consumers to turn to other sources of supply than India for their lac. It is an error to suppose that India alone produces lac. No doubt, practically she may be said to possess the monopoly of the trade at present, but some quantities are also exported from Siam and the Straits Settlements, and a development in the trade of these countries would assuredly follow upon a continued unreasonable valuation of the Indian lac, and carelessness in its preparation for the market. A considerable silk trade has gradually slipped out of our hands, and a once flourishing industry is in a state of decay, because unreasonably high prices have persistently been combined with an inferior article."

We however are not sanguine that the rates of shell-lac will rise again to any material extent, unless the industry should receive a still greater impetus than heretofore by the commodity coming into more universal requisition; or that the firms who have lately engaged in the trade, on the expectation of realising the prices of 1874, should back out of it on finding that this is not probable. The former high prices, we believe, were greatly owing to the limited number of European houses engaged in supplying the foreign markets, who as long as the demand continued in excess of, or equal to, the supply, could obtain, within a certain margin, whatever prices they chose to impose. Since then, however, the trade has developed, new factories, belonging to new men, have sprung up, and the industry has been commenced successfully in other countries than India; and it seems to us that this competition may fairly be expected to have a lowering effect on the pulses of the market, especially as it would appear that the demand

has attained its present limit. But from a return given on page 41 of the pamphlet we learn that more than 90 per cent. of the total amount of shell-lac exported from British India is shipped at Calcutta, and that about the same proportion of the whole is purchased in unequal shares by Great Britain and America; the former taking 59,199 cwts. out of the total quantity sent to these two countries, *viz.*, 72,814 cwts. There are good grounds, therefore, for hoping that, should no better or cheaper substitute be discovered, the present demand may hereafter expand to a considerable extent. The amount of stick-lac sent out of the country appears to be quite inconsiderable.

Compared with shell-lac, the trade in lac-dye has undergone even greater fluctuations. The quantities of this article exported rose from 11,700 cwts. in 1866-67 to 20,500 cwts. in 1869-70, from which date there was a rapid fall to 8,377 cwts. in 1874-75. In the following year, however, there appears to have been a slight reaction in its favor, as the exports rose to 10,592 cwts. Lac-dye has fallen too in price to such an extent, that one is led to wonder how it can pay the manufacturer to give it any attention, or to indulge in a calculation of the profits that must have been realised from its sale a few years since: if a decent return can be obtained from selling it at Rs. 15 per maund—its present price—what could have competed with it as a fortune-maker when it was selling at Rs. 85 per maund in 1869. But its day seems to have passed, in spite of its having been removed from the list of dutiable exports. "Lac-dye, in fact, is now of very minor importance, both in the eyes of manufacturers and shippers, as compared with shell-lac. It has always had competitors in cochineal and other dyes, but lately the competition of mineral dyes has become very formidable. These aniline dyes are produced so cheaply, and are worked so easily, that they threaten to supersede the use of most vegetable dyes, and it is probable that the prospect of Indian dyes will before long require much consideration from the State and all interested in them." With regard to cochineal, we have seen it stated that the Canary Islands and Madeira turned out between them the large quantity of three million pounds weight, and that Great Britain alone paid annually a million

of dollars for the dried bodies of the insect containing this dye.

Mr. O'Connor mentions that the Forest Department has commenced the artificial production of lac in at least two different Provinces, but we are not informed to what extent their efforts have succeeded, beyond the fact that a few acres of lac plantation have been established with good results in Burmah. One point appears tolerably plain, *viz.*, that the manufacturer has up to the present time found no difficulty in obtaining the raw material in sufficient quantities, and at a rate to enable him to turn out the worked-up material with handsome profits; for his prices, as we have seen, have suffered from the markets becoming overstocked. Under these circumstances it becomes a question whether Government should take part in the production, and unless good reasons can be shewn for the step, it would appear to us inexpedient. But there can be little doubt that Government should be able to carry on the cultivation in a cheaper manner and with less risk than can be done by private individuals, for the production of lac is more or less a speculative undertaking. A drought will render unproductive two or three seasons' work, and in Indian Forests the same result may be brought about by fires, which are an annual institution over the greater part of the country where the insect is found. Frost, too, has a very damaging effect on the crop, and the winter gathering may be badly effected by heavy rains during the summer evolution of larvæ. Of course, the risk from physical causes, such as drought, frost, and rain, apply equally to both Forest Department and private speculator; but the former have large areas of forest which are protected from fire, a trained and intelligent staff of officers and subordinates, and extensive tracts of forest land from which suitable selections could be made, all of which appear to us facilities likely to render their efforts more uniformly successful than those of private agencies; and if so, they merely should result in the production of the article at a minimum expense. For these reasons we hope the Department will give the experiments their best attention, and not allow one or two initial failures, should such be

experienced, to lessen their endeavours in bringing this means of increasing the forest surplus to a successful issue.*

Z.

M. de la Grye on Forests in Roumania.

THE August number of the *Revue des Eaux et Forêts* contains a report by M. BOUQUET DE LA GRYE on the Forests of Roumania, addressed to the Administration at Bucharest.

A report on forests situated in a country to which forest conservancy is new,—forests, too, which have been mutilated, burned in the exercise of the "sacred rights" of the people, and the recommendations which an experienced French forest officer makes regarding the first steps to be taken for their amelioration, cannot be without interest in India.

The charming way in which things are put in the original French cannot, however, be reproduced, and the article (page 265, No. 8 of 1876) should be read.

The forests contain the magnificent area of 816,335 hectares, equal to about 2,015,261 of our acres. This area is only approximate, as many of the forests have not been surveyed. The wooded area is also less than this, as the forests are full of large blanks (*clarière*) and extensive enclosures of grazing ground (*enclaves*), and the area of these has to be deducted.

The forests in the plains have oak as the dominant species—those on the lower slopes of the hills consist also of oak with beech and other secondary species. The forests of the mountains contain beech, silver-fir, and spruce. But abusive cutting has in many places destroyed the coniferous element almost entirely. The growing stock is very irregular; everywhere the forests are full of dead or dying trees mixed with trees of middle-age; but young thickets are rare; this state of things being the natural consequence of excessive grazing, fires, and other delicts, and want of proper exploitation. The conditions are, however,

* We hope the Department will be successful, but as far as our experience goes at present, the production and collection of the raw material will only be remunerative, when the price of the labor is not taken into consideration, as in the case of the Natives of the country who generally collect the lac in their spare time, when not occupied with agricultural operations, and when they have nothing else to do.—THE EDITOR.

very favorable for tree growth, and M. DE LA GRYE considers that the stoppage of destructive agencies will in most cases suffice to effect a regeneration. The soil is "marvellously fertile."

Following the order of subjects chosen by the author, I shall extract a few notes under each head, shewing how very similar the difficulties found in Roumania are to those we have to encounter in India:—

Pasturage.—The farmers of each domain give out grazing leases; each farmer has the right to let cattle graze in any forest *over* 20 *years of age.*

I may here remark that this rule has had just the same consequences as the absurd idea held in Upper India in former days, that it was only necessary to reserve to Government the right in the standing trees or bushes.

In the former case, as the cattle do not allow any new wood to grow up, when once the first period has passed, there *never is* any more forest under 20 years of age! In the latter case, the result was much the same; no protection being afforded, no new growth would appear, or too little to form a continuous mass, and as the "standing trees" were cut or died from age, the right of Government and the forest would disappear together.

Grass is also cut in all blanks. The consequence is that there is no reproduction—the sickle cuts what the mouths and feet of cattle, small and large, have left.

Forest Offences.—The people "have an inveterate habit of considering the forest as a common property from which every one may with impunity take what he pleases. People take wood from the (State) forest as they would draw water from a river."

M. B. DE LA GRYE with truth says (what would make some good-natured old Commissioners shudder) that "these ideas of a by-gone age must be got rid of by active supervision and prompt repression."

The only guards at present are chosen from among the unlettered peasantry who are under the influence of the farmers. The prosecution of offences is slow, and the punishment uncertain.

The finest poles in the forest have been cut, because it is easy to remove them. Everywhere trees are seen hollow, mutilated, dead, and young shoots hacked.

When a tree is too large to fell easily, they cut it above and make a series of deep notches to form a ladder up the stem. The finest silver-firs often show deep gashes made by the woodmen to test the quality of the wood,—which not pleasing them the tree is left. In other cases, trees are fired at the root, so as to make them fall easily. The peasantry also set light to old trunks so as to warm themselves easily, and these often burn for weeks together.

Exploitation.—The Administration, it seems, had begun to think of introducing system and consequently (while doing nothing to improve the repression of offences) had stopped all exploitation in forests for which plans had not yet been drawn up. To some extent, of course, this idea had a reasonable basis; but as an enormous area was full of trees over-mature, dying, and dead, there was a great mass of material accumulated on hand. In some cases where an exploitation was ordered, the accumulated mass proved too great to be disposed of, or so situated that purchasers were not forthcoming. In many cases the "*personnel*" was so scanty that officers could not be made available to prescribe the most urgently required cuttings.

All *aménagement* therefore has become impracticable. It is not possible to arrange a plan for a long period for forests in which the greater part of the stock is dead or dying.

Regulation of Pasturage.—In this country, as in many of our Indian districts, the interests of agriculture, forestry, and grazing are so closely bound up together that it is not possible to modify to any great extent one, without affecting the others. To prohibit grazing altogether could not be thought of. But all leases must be made to define the extent of the blocks for which they hold good, and they must be granted under supervision, so as to allow of the forest officers selecting blocks to be closed for reproduction.

As the forests of the Carpathian mountains enclose large areas of grazing ground, it is not possible to give up these areas to be clothed with trees; these grounds, in fact, constitute

one of the sources of wealth to this country; but their boundaries have to be determined and *defined routes laid down by which they may be approached through the forest*,—"it would be no use talking of closed blocks, when the graziers could fill them with their cattle under pretence that they were being driven through to the upper pasture grounds."

To protect against fire (for here the people set fire to the grass to improve the quality of the young growth) a condition in the lease will be inserted, providing that the whole forest burned will be immediately closed against grazing:* thus it is to be made against the interest of the people to burn, as their act will of itself defeat its object.

It is unnecessary to reproduce what is said about organizing the service so as to prevent crimes; for the remarks relate to an existing state of things which does not resemble that with which we have to do in India; but the fixing of a definite head-quarters for each official and the construction of houses near the forest are urged.

Improvements in Working.—The staff is too small to arrange for this properly. The excuse is that public funds do not permit its increase. M. DE LA GRYE urges that this is to argue "in a vicious circle." There is no staff, because there is no forest revenue; there is no revenue, because there is no exploitation; there is no exploitation, because there is no staff to select, mark, and sell the trees. Happy the people who have only this vicious circle to deal with; how much harder to convince financial authorities that it is wise to allow a proper staff where only planting has to be done, and protection and improvement effected in ruined forests, of which *future* ages will reap the benefit!

The State has been too much occupied in making working plans, and not enough in giving value to its material at hand. Before you make a working plan you must see that you "put your produce within the reach of commerce." If, having made a plan, you cannot dispose of your material, the plan will be suspended and become useless.

* This rule was enforced by me in Sind, while acting as Conservator of Forests in that province.—W. SCHLICH.
It is now enforced by law in the Panjáb Hills.—B. H. B. P.

BENGAL SECRETARIAT LIBRARY

[This is eminently true; but Indian foresters will not forget the *other* side, *viz.*, that where you *are* able to sell all your produce, and have continual demand upon it, it is against all economic right for us, the mere usufructuaries of the forest, to go on exploiting without knowing the extent of the annual yield which is the limit of our proper use of the forest.]

The Administration is to authorize cutting wherever necessary; "it is better to make an exploitation even poorly justified, than to let a forest ruin itself for want of cutting."

Method of Treatment.—After warning that a thorough exploration of each locality is needed, and adding that the author has not attempted "in a month's visit, a study which would demand 20 years of assiduous work," and that his remarks are suggestions or ideas only, to be modified according to circumstances;—it is recommended for the plain forests (oak chiefly) to adopt the method of "*tire et aire,*" taking off all the standing crop, with the exception of a number of reserves. The reserves are to be 80—100 per hectare (say 30 to 40 per acre); the rotation to be 40 years. When the forest consists chiefly of old and dying trees, if the reserves will not live through so long a period, the rotation should be diminished to 20 years.

The soil is so good that, except for blanks and for those forests which are all composed of dying trees, and must therefore be replanted artificially, rest and protection will enable the reserved trees to restock the forest by their seed shedding. Nurseries are to be prepared for filling up blanks, &c.

For forests on the lower slopes, the method of "cutting for natural regeneration" has to be followed, but at present there are no officers who know how to make the successive cuttings properly; therefore, for the period which must intervene while such persons are being got together and educated, the cutting to be done is only of dead and dying trees. The object is to make clearings which will be naturally re-sown, and form blocks of young growth of uniform age which will form the material for a future regular plan.

These forests would appear to be the ones best situated to attract the export trade, so that two things have to be attend-

BENGAL SECRETARIAT LIBRARY

ed to: first, to make the cuttings sufficiently extensive and important to attract large timber traders and speculators, and this, it is hoped, will be possible, as the timber is of "exceptionally fine dimensions;" and second, to select the sites of the cuttings to be first taken in hand, in places as favorable for export as possible, or where there is a large local demand.

The mountain forests, consisting of beech, silver-fir, and spruce, either pure or mixed, have been over—cut as regards the conifers, in all places where extraction was easy. There they had been cut by the "*tire et aire*" system, which was altogether inappropriate.

For the very irregular forest resulting from this treatment, followed by destructive grazing, the selection method is the only one applicable.

Well-executed "selection-cuttings" will be made to favor the conifers; and besides this, small fellings at a number of points will be advantageous in preventing the stoppage of local industries, which have already suspended their work for want of wood. The dangers of selection-felling will be much reduced if the selection is confined to areas clearly defined by natural boundaries, which have been examined beforehand by competent persons.

Then follow some remarks about the conditions of sale which were, in Roumania, made too strict.

The Staff.—In the whole area of the forests they had in Roumania, under the "central administration" (which the Report does not touch), 4 inspectors, 10 sub-inspectors, and 32 guards. (Deputy conservators, assistant conservators, and forest rangers—gardes-generaux). Such a staff could not know even superficially, the enormous area under its charge.

The administration of forests comprehends three branches: "protection," "management and working," and "control."

It is necessary to see that the staff can efficiently perform all these. The first comprehends the forest-police, the prevention and detection of offences; there are certain officials belonging to the domains in Roumania, who fulfil their duties, and there are also "gardes-limites," or boundary-keepers spoken of in the same category. All such should be under orders of the "gardes-generaux."

The management and working comprises the recommending of the fellings requisite (where a plan has not been made), the watching of the fellings in progress, and of all other works. The "garde-general" is the executive officer for the purpose, besides being the immediate superior of the protective staff; over them are the sub-inspectors who get orders from the administration, and they direct their subordinates accordingly. The sub-inspector is responsible for all accounts of income, free grants, &c., and for discipline.

The control is exercised by the inspectors, and these should be exclusively so occupied. They are constantly to inspect and see that everything is done in order and properly. They are to advise on all working proposals.

The last question taken up is how to get proper men, and M. DE LA GRYE would be astonished if he knew what discussion this matter has given rise to in India. He takes it as a *matter of course that forest agents must be taught their business*, and plunges at once into a discussion of classes and the establishment of forest schools as a *sine quâ non.*

With all our number of native rangers and foresters, we have only made one totally unsuccessful effort to get men through a semi-professional course at the Rúrki Engineering College, and that is all!

There has been indeed some talk of doing better things than this, as the importance of the subject is patent to any one with common sense. But to do good one must make *a thorough sound business of it.* Any atttempt to do it cheap, and send a few men here, and a few men there, locally to learn what they can under an officer, who has already his hands full of work, as the chief forest officer of his charge, will be a failure. We must have teachers of aptitude whose chief work is to teach; they may have charge at the same time of the forests destined to be the teaching ground, but that is all.

When will our rulers get out of the "vicious circle" and see that true economy demands the proximate establishment and confirmation of a sound and simple scheme. In an appendix M. DE LA GRYE proposes an entrance examination and a final examination. The teaching to include—

1. Geology, botany, and entomology, 3 lessons a week.

2. Surveying, levelling, triangulation, &c., drawing plans and maps, &c., 3 lessons a week.

3. Forest works (slides, roads, tramways, floating timber, extinction of torrents, &c.,) 2 lessons a week.

4. Sylviculture (working plans, principles of culture and exploitation), 2 lessons a week.

5. Forest law, &c., 2 lessons a week.

Each lesson lasts an hour, and two lessons are given in a day.

Immediately after the lesson, an hour is devoted to writing out clean, the notes made during the lesson; during the lesson itself no books are allowed, to prevent pupils getting things by rote, or learning by heart.

Every day some time is to be devoted to drawing plans and maps.

After the course is over, tours and practical work in the forest begin.

Before concluding his report M. DE LA GRYE draws attention to the great injuries caused by torrents and ravines which have resulted from the denudation of the soil and abuse of forests in Roumania.

All the rivers alter their courses, and are filled with sand carried down from the mountains. They are neither navigable, nor can they be used for irrigation, or as a motive power for machinery, the sandy deposits entirely prevent "canalisation" and embankment.

Near all villages in the mountains, torrents and ravines are worst, because there, abusive cutting and over-pasturing are the most practised; the further one goes from the population the less frequent the ravines become, and they disappear altogether in the wooded region.

"In no country have I seen the effect of the destruction of the natural covering of the soil manifested in so great intensity as in Roumania. This is due to the friable soil, which is composed wholly of matter easily washed away, sand, pebbles, clays, and vegetable mould which have no cohesion."

"When the steeper slopes of such lands are denuded, the small-

est streamlet of water cuts a furrow which soon becomes a deep ravine. Great sheets of rubble and other materials carried down by the melting snow, or by the rainfall, may be seen spread at the foot of the slopes."

"The waters carrying down these materials overwhelm cultivated fields, cut up the roads, and are at last poured into the rivers, whose beds become filled up and their courses altered."

M. DE LA GRYE goes on to point out how the cattle aggravate the formation of ravines, not only by destroying all the vegetation (goats especially), but by breaking up the soil and thus aiding the widening of the ravines, because as the water cuts in deeper, the tendency of the sides is to fall in, and the cattle help this mischief exceedingly.

"Roumania," he says (and he might have said the same of Hazara, Rawulpindi, and Kangra, and many other parts of India), "ought to have as great a care for its mountains, as Holland has for its dikes; for it is threatened by torrents as the Dutch are by the incursion of the sea."

It *can never*, he concludes, *be considered an infraction of the rights of property*, to make a rule which has for its object the prevention of the damage done by wasteful cutting and overgrazing. A proprietor who so treats the slopes on which ravines and torrents may form, as to cause their formation or increase is inflicting an injury on all the proprietors below and around, which he has had no right to do. The law has a right to require at least, that in ruining his own estate he should not ruin theirs also.

The means are cheap and simple. To interdict absolutely the use of places threatened with ravines, is often enough. At least an inexpensive system of staking or embanking with "barrages" may be required. It is not meant, of course, that every landslip can be prevented, and every calamity nipped in the bud: but that the preservation of a soil covering is the only known effective means of preventing and curing ravines. Medical science is not successful in curing every instance of disease, but we do not on that account neglect to call in the best surgeons and physicians in all cases of danger.

B. H. B. P.

III. Notes and Queries.

Forest Management in Madras.*

No. 17. *Read the following letter from Lieutenant-Colonel* H. R. Morgan, *Officiating Conservator of Forests, to the Secretary to Government, Revenue Department, Fort St. George, dated Ootacamund,* 12*th August* 1872, *No.* 1415 :—

With reference to Campbell Walker's report on English and Scotch Forests I have the honor to forward a Memorandum on the subject as certain suggestions regarding Reserves are made which, in my opinion, might with advantage be carried out.

Enclosure No. 1.

Memorandum on Captain Campbell Walker's Report.

Reserves.—The most important part of the report relates to the fresh light thrown upon the communal rights of those living in the new forests and the action of Government regarding those rights. It will probably be found that some similar action on the part of Government in this country would work well. For instance, where it is desired to improve a rich part of a forest, this part, to the extent of one or even ten square miles, might be fenced in and planted up, and at the end of twenty years, when the trees were well grown, might be thrown open. In this manner considerable areas of forests might be successively taken up without at all interfering with grazing or other rights.

2. Plantations.—At page 10 it is admitted by one authority that pits are better than mere "slits" even in England, and I am very sure that pits are far superior to mere "slits" for India. The cost of pitting seems much the same in both countries; but everything depends on the soil—the richer and

* We have been requested to publish these papers, which are supposed to show that the doubts, entertained in the October number of the "Indian Forester" regarding the practice of forestry on the Madras side, are unfounded.—The Editor.

looser the soil the smaller the pit, the harder and poorer the soil the larger the pit. There is a third reason why deep pits are desirable in this country, *viz.*, that the roots may rapidly bury themselves in the moist sub-soil below the influence of the sun's rays. Our pits in dry places are often two feet deep.

At page 17 Captain Campbell Walker in the last paragraph suggests the English mode of treating nurseries. From my experience I may say that it would not do. Did we grow firs and other trees which at five years of age are only six feet in height it might be practicable? but the trees we principally plant, *viz.*, teak, eucalypti, and casuarina grow six feet in a year and must be put out when young. As for the cutting of the tap roots I may say, as a rule, they are always shortened, and I do not understand how the mistake arose on Captain Walker's part. No two trees are treated exactly alike; but I may, to prevent future errors on this head, explain the system.

At Nellumboor the seed is sown in beds in April. These beds are raised six inches and have an inner edge of three inches which retains the water for some time, when it slowly percolates through the bed. The seed is literally soaked in these beds for fifteen days; when it sprouts the supply of water is decreased. By the end of June the plants are six inches high. They are taken up, and have the appearance of a bundle of radishes. A man shortens the tap roots to four inches; if left longer the coolies turn up the end of the root, and the plant is sure to be sickly. At Mudumallai, which is much colder, our plants by July are only two inches high, with tap roots only three inches long; these are never cut, but carefully preserved. So it is with sandal-wood plants: we lift them when only three inches high, and never cut the tap root unless it exceeds six inches. With eucalypti the plan is to lift the plants when six inches high, cut the tap roots, and put them back into beds six inches apart: when two to three feet high they are taken up, their roots bound up with moss, and re-placed in beds. When the roots show through the moss the plants are put out in the pits. The failures from this mode of treatment are never three per cent.

I may mention that the tamarind and mango, when their tops are but three inches in height, have tap roots more than a yard long; it is best to plant these seeds *in situ.*

In a moist damp climate like England or Scotland planting out can be carried on for nine months in the year; in this country we can rarely plant out for more than two months. In fact, the general conditions of forestry are so dissimilar that what does well at home is very unlikely to succeed in India.

3. Working of Forests.—At page 19 the stamping of trees is dwelt upon. This is practised on the Annamallies, where the trees contain from fifty to two hundred cubic feet. It will be found difficult to carry it out in all our forests; for instance Wynaad, which has had seven officers in ten years. This perpetual change renders forestry in this country very difficult; in fact, what with fever, impenetrable grass, constant change of subordinates, &c., we cannot afford more than the roughest kind of supervision; anything else will infallibly break down. In England they have no such grass, no fever, no impediments of any kind, and forestry, instead of being a life of great risk and exposure, is the healthiest life a man can live.

4. Fencing, as proposed at page 21, would cost double in India or ten annas a yard, and creosoting would hardly be effective against white-ants. A ditch and thorn hedge in out-of-the-way places would be found cheaper in the long run; but a small area might, as an experiment, be tried on the plan recomended.

5. Admiralty Timber.—As we very probably shall no longer supply the Bombay dockyards, the suggestion of supplying the English dockyards direct is a good one.

6. Saw Mills.—What we require is a portable machine that can be carried to a depôt in the forest and worked by elephants or bullock-power, a single vertical saw. To saw teak and saw deal are very different things. I gave the idea of what was required to Mr. Smith, the Mechanical Engineer at Wellington. He promised on going home to see if he could work it out, but I have not heard from him. Many of our logs are so large that they require to be divided before they can be carted away. I have always experienced great difficulty

in obtaining sawyers for this work. What with jungle fever and the fear of wild elephants, my sawyers soon dwindled away, leaving the work unfinished.

Turbines when there is a fall are very effective, but circular saws are constantly buckling, and cannot be repaired except at Madras.

7. GRAZING.—The remarks on grazing at page 23 are to the point and command attention.

8. CREOSOTING.—This was tried on the Madras line, but was not proof against white-ants, I believe.

9. In conclusion, I would remark that if an intelligent officer like Captain Campbell Walker had had opportunities of visiting Nellumboor, the Annamallies, Wynaad, &c., he would not have fallen into the errors regarding planting that he has done, nor would he have recommended (page 32) wire fences for places where elephants and bison, to say nothing of white-ants, would soon destroy them, nor (page 33) steam engines for forests where jungle fever would quickly prostrate the Engineer. I would only too gladly recommend Captain Campbell Walker's scheme if I thought it would succeed; but on the Annamallies and in Wynaad I fear nothing but the simplest sawing machine such as I desire, but cannot obtain, would be of service. It is admitted at page 32 that the sawing difficulties are "very great." The mode of felling adopted in Tinnevelly, cited as an example of "what now goes on," is an exceptional case, and hardly an example of what is done in the Department. Captain Campbell Walker deserves credit for ventilating these matters; but it seems to me that if we had a Manual showing the correct mode of sowing, planting, felling, dragging, carting and general mode of working the different forests, much misconception would be avoided and good results follow. Our present Manual is rather old, and was drawn up by various officers, some quite new to their duties. I would propose, if the Government consider it advisable, that a Manual for Forest Officers be drawn up by the Head of the Department; of course, in consultation with Forest Officers. The Manual might contain the rules of the Department, the mode of working different forests, the mode of planting pursued to be

exemplified by rough sketches, the cost of carting, felling, dragging, &c.

(Sd.) H. R. MORGAN, *Lieut.-Col.*,
Officiating Conservator of Forests.

OOTACAMUND, 12*th August* 1872.

No. 18. ORDER THEREON, 5*th September* 1872, *No.* 1280.

ORDERED to be communicated to the Board of Revenue for circulation to Collectors and their Forest subordinates.

Forests, No. 1.

2. The question of employing sawing machinery in the larger forests is one to which the Conservator should give his attention in communication with the Superintendent of the Government Workshops.

3. The Government fully approve the suggested compilation of a revised Manual, and request Colonel Morgan to draw Major Beddome's attention to the subject on his return from leave. Colonel Morgan is thanked for his Memorandum.

(True Extract.)
(Sd.) W. HUDLESTON,
Secretary to Government.

Forest Management in Madras again.*

THE cutting of teak in the Annamally forest, the finest in Southern India, has had to be stopped, the Conservator of Forests having reported that there are no longer any trees of the proper age for felling. The young trees will require several years to arrive at maturity; and the consequent temporary loss of revenue to the Madras Government will be considerable. A still greater evil than over-felling is the destruction of almost all the saplings of two or three years' growth by the fires lit by the herdsmen to provide pasture-ground for their cattle, a practice which has done immense mischief, and threatens ere long

* This extract from the *Englishman*, just to hand, shows what we shall come to without proper working plans. A few more instances like this will do more good than all the preaching on our part.—THE EDITOR.

to leave the hills entirely bare of timber. A proposal for checking it by legislative enactment, and the conservation of the forests on what is known as the block system, has been submitted to the Local Government by Colonel Beddome, and will probably be acted upon.

Memo. on the Conservative Treatment of Forest of Bambusa Brandisii.

TO THE EDITOR OF THE "INDIAN FORESTER."

DEAR SIR,—A letter appeared in your July edition, describing the temporary destruction of valuable bamboo resources by a general flowering.

This drew my attention to the probable or at least possible importance of a memo., I find amongst my notes on Forestry in B. B., of which I place herewith a copy at your disposal.

Yours sincerely,

A. C. F.

WAYJOA, 8*th December* 1876.

On the Irrawaddi exists a considerable trade in the large shoots of Wabo, Bambusa Brandisii (Monro) or Dendrocalamus Brandisii according to Kurz. They are used for boatmasts, balance buoys to heavily loaden boats, posts for house building, &c., or brought down to Rangoon and sold for scaffolding.

My first step was to fix the main sources of supply, which I found to be artificially created and conservatively treated forests near the river bank, and not, as I expected, natural bamboo localities.

I took the first opportunity of visiting one of the more important of these forests near Myanoung.

The plantation is situated within half a mile of the river bank on a rich sandy alluvial soil surrounded by excellent paddy fields and flourishing pine gardens. Its whole extent being above 20 acres, it is divided into blocks of ½ to 2 acres belonging to different villagers.

It was impossible to ascertain the exact age of the forest, but as several old inhabitants informed me that it had been planted during their early childhood, it may safely be put down to be above 50 years.

This, however, is unimportant, but in so far that it has been ascertained by the cultivators that this bamboo flowers at the age of about 40 years, which without a conservative treatment would destroy the bamboo resources of the area for the time being.

To prevent this the villagers dig up a small portion of the stock with a shoot of the year, and plant it in the beginning of the rains. This method of cultivation is, of course, known wherever bamboo exists, but it is a fact which I have seen nowhere recorded, that the portions of the rhizome thus cut off and separately planted has not only the power to produce a new clump of bamboo, but also to supply this clump with the same productive vigour as if it had been grown from seed; and though the rhizomes of both bamboos are of the same stock, the mother tree will flower and die long before the young plant.

On the Irrawaddi the settings are planted into the forest where a clump has flowered and died, on the outskirts of the plantation or wherever there is, for some cause or other, sufficient light for its growth.

In the first year the setting produces the small whip-like shoots, similar to those springing from bamboo seed, these increase annually, till after seven years they attain a size of about 10-inches circumference and a height of about 40 feet.

At this age they are cut for the market, but it is not till the clump has attained an age of 15 to 16 years, that mature shoots are obtained.

When mature, all 3 years' old shoots are annually cut, each clump yielding 3 to 4 shoots.

At Myanoung I found 15 to 20 yielding clumps per acre and the prices paid to the cultivator, I ascertained to be, Re. 1-4 for a straight mature bamboo, and annas 4 for the smallest.

A. C. F.

Vitality of Teak.

In his Report on the Forest System of British Burmah, page 13, para. 72, Mr. Baden-Powell, dwelling on the wonderful vitality of teak, says :—" Moung Poh Oh, Assistant Conservator, assures me that he has seen a teak tree felled green, and lying on favorable soil, put forth shoots." I myself observed a similar fact the other day. In this case, a teak tree had been broken off clean by the wind, and the portion on the ground had produced leaves and young shoots possessing apparently the same vigour as if they had been growing on a rooted tree. But a more extraordinary occurrence of this kind has just been communicated to me by my friend, Mr. Thomas, which happened last year at the Alâpillî sawmill attached to the Ahirí Reserve in the Central Provinces. A lot of teak sleepers cut from green logs were stacked on the bank of the Alâpillî Nala preliminary to being floated down into the Waingangá. Some of the sleepers were not quite die square, but had pieces of bark adhering here and there at the edges. A large percentage of these sleepers that were inside the stacks, and which were, therefore, screened from the direct rays of the sun, threw up shoots at the commencement of the rains. As was to be expected, all the shoots were etiolated, extremely herbaceous (like asparagus, to use Mr. Thomas's own words), and bent about in every direction in their endeavours to grow towards the light. That the outside sleepers did not develop shoots may be accounted for by supposing that exposure to the direct rays of the sun dried up the small strips of bark which contained the buds. I also feel inclined to think that darkness assisted in no little measure the growth of these buds until they burst through the bark and put forth leaves. Again some half round sleepers used in the saw pit threw up shoots in a similar manner. Some of these shoots were removed along with portions of the adhering bark (as is frequently done in grafting) and put into the ground up to an inch or so above the bark; but they all died. It is right to mention that the planting was performed by some subordinates without any European supervision; nevertheless it appears pretty certain from physiological considerations that the experiment, however carefully performed, will never suc-

ceed. Mr. Thomas also saw in Ahirí a felled teak tree (1st class size) that had thrown up a mass of shoots all along the trunk and branches. These shoots had already completed their first year, and were beginning their second year apparently in the full vigour of growth. But Mr. Thomas unfortunately forgot to observe if they had struck root. It is, however, justifiable to infer that this did take place, for on no other supposition could he account for the fact that the shoots had lived through a whole hot season, and absorbed enough moisture to develop leaves at the beginning of the ensuing rains.

It would be extremely interesting to receive further information on this most important subject from our colleagues in Burmah, the Central Provinces, Bombay, and Madras.

MUHAFIZ-I-JANGAL.

Rats in Nurseries.

TO THE EDITOR OF THE "INDIAN FORESTER."

SIR,—In a letter printed in the July issue of the "Indian Forester," Mr. Sparling asks for information regarding the best means of meeting the ravages of rats in nurseries.

As far as I am aware, no practicable and really efficient method has yet been devised for exterminating rats, and for this reason they have always been in every country curiously the most formidable enemies of the young forest. The usual method of sprinkling amongst the trees to be protected other species which are preferred by the rats in the expectation of their eating the one, and sparing the other, is wholly insufficient when the rats are in large numbers. Traps cannot be set in sufficient quantities to catch all the rats. Poisoning is the best plan, but is objectionable because cattle may be poisoned, and has usually been unsuccessful for want of a proper method. All such operations must be performed on a large scale; it is useless to attempt exterminating the rats on a small area, for they will always return from the surrounding country.

My object in writing this letter is to give an account of a method of poisoning employed in open sowings by Forstmeister E. Heyer in Giessen, which appears to me to have

many points in its favor; at least it seems to be more systematic than the plans usually adopted. The experiments on the method, which seem to have been on a very large scale, are described at length in the Allgemeine Forst and Jagd-Zeitung in the numbers for January 1873 and February 1874. A full translation of the articles would be tedious to the readers of the "Indian Forester," but I will do my best to give a resumé of the method employed. If Mr. Sparling wishes for more details, and will let me have his address, I shall be happy to give them to him, or to lend him the numbers containing the articles which are in German, and are well worth the perusal of any one who is interested in the matter of rats.

The two principal points to be known are how to prepare the poison, and where to lay it.

In choosing the kind of poison, we must seek to combine, as far as possible, the following qualities:—

a. Cheapness.

b. The power of attracting the rats.

c. Speedy action, so that a small quantity is sufficient to cause loss of appetite and eventual death.

d. The power of resisting the decomposing influence of air and moisture.

e. The property of converting the dead rat itself into poison for the other rats, which are known to feed upon their dead comrades.

f. As the young sowings will eventually be re-opened for cattle grazing, the poison should be of such a kind that in the course of time its poisonous property will disappear, that the cattle may not suffer.

The kind of poison which best fulfils all these conditions, except the first, appears to be strychnine, but as strychnine is expensive, it can only be employed in nurseries, and not in the open sowings.

Next to strychnine, phosphorus is the best poison, but it is apt to deteriorate through exposure.

Arsenic (arsenious acid, or white arsenic) is less speedy in its action than phosphorus, but resists the action of the air better.

If a mixture of phosphorus and arsenic is used, the advantages of both are combined.

As our writer lays great importance upon the method of preparing the poison, I will give the directions in his own words. "The proportions of the ingredients are :—

Flour ...	...	...	1·00000	parts.
Wheat	...	...	1·00000	"
Phosphorus	...	...	0·01209	"
White arsenic	...	...	0·01101	"
Water	...	..	0·46591	"*

"The water should be first weighed out and poured boiling hot into a kettle, together with the weighed quantity of phosphorus. This having melted, one-third of the whole quantity of flour should be added by degrees, and afterwards the difficultly soluble arsenic, the whole being thoroughly stirred. The wheat should now be stirred into the paste thus prepared, and the second third of the flour added. The mass will then be of the consistency of a stiff dough and should be placed in a flat open box, at which several people can stand and knead the mixture of dough and wheat thoroughly with the remaining third of the flour. This should be done in such a way that the single corns, instead of remaining imbedded in the mass, separate from one another, each being covered with a crust of the poisoned dough."

"To escape inhaling the injurious vapours of phosphorus, the workmen should, during the process, keep their heads in the air; the vapours will sink in the atmosphere and will then be harmless."

If strychnine is employed, apparently wheat alone is used, without the flour. The wheat must be germinated, and then soaked in the solution of strychnine, and finally roasted. The poison is by this means brought into the interior of the grains. This is important, since it appears that the outer portion of the grain is gnawed off by the rats, and only the inner portion is eaten.

I would remark that the stirring and kneading of the poison

* The proportions are given in this table in an alarming form. Reduced to English weight, they are for each pound of flour and of wheat, 84½ grains of phosphorus, and 77 grains of arsenic, and 8 ounces of water.

ought to be done, not with the hands, but with wooden utensils.

As regards the laying of the poison, two points are considered important: first, the poison must lie where the rats are likely to find it; and second, the places must be easy to find again when fresh poison has to be laid. Several methods are recommended, but the one generally employed was that of digging small channels or passages at a distance of about 25 feet apart over the whole area of the sowings. These channels were lined on each side by narrow strips of turf; the poison was placed in these on pieces of wood or brick, or on stones, which served to keep it dry, and the channels were then roofed over with boards or bricks.

Another plan suggested is to lay the poison in perforated bricks placed in groups, several together, each group being covered with twigs of some species of tree for which the rats have a preference, as for instance in Europe willow or hornbean.

I would however suggest that, as Mr. Sparling's rats burrow in the ground, the poison would be best laid in the burrows.

There is a long statement of cost attached to the articles; it will be sufficient for me to state that the average cost reduced to Indian coinage and measure was roughly about Re. 1-4 per acre, of which about one-third was for preparation of the poison, and the remainder for laying it out.

A third article stating the results of the experiments was promised, but has not yet appeared.

Rats which burrow in the ground as most, if not all of them, do, may also be smoked. The ingredients of the smoking mixture are saltpetre, sulphur, and tar, mixed up with saw dust, but I am unable to give the proportions. On the day before the smoking takes place, all the rat-holes should be filled up with rubble. Fresh holes will then be formed, and into these burning lumps of the mixture should be introduced. The holes must then be trodden to again, and closed with lumps of turf or stones.

In conclusion I would express a hope that if Mr. Sparling adopts any of these methods, he will publish an account of the

results of his work in the "Indian Forester," since the subject is an interesting one to many both in India and in England.

I remain, Sir,

Your obedient servant,

G. A. HIGHT.

JHERRUCK, SINDH, *5th September.*

Sowing Teak Seed.

IN reply to H. G. B., at page 414 of the "Indian Forester," issued in April last, I am sorry to say that I cannot accept his compliments, *viz.*, that my "teak plants are all in a flourishing condition," however, I shall try to reply to his queries as to the method I find most successful in raising teak seedlings in nursery beds.

In selecting a site for a teak nursery I like to get a piece of ground as nearly level as possible with the soil either light clay or loam; if clay, I give a basket of wood ashes to each square yard; if loam, about half that quantity. I have found teak ashes much the best, but that is seldom procurable in large quantities.

I have the soil picked up, or ploughed to the depth of 8 or 9 inches, and the earth made very fine by stirring and beating. The beds are lined off about 3 feet wide, with 1 foot 6 inches walks between, the beds should be raised 3 inches above the walks; when the beds have been made up, furrows are made across the beds at from 3 to 4 inches apart, and 2 inches deep. This is done very expeditiously with a country axe, moved backwards and forwards until the proper depth is reached. I sow the seed in the furrows rather thickly, so that the seeds should touch each other and form a double line throughout the length of furrow, then have it covered with from ½ to ¾ of an inch of fine earth; the whole should then be covered with a thick coating of grass; the grass should be left on the beds till artificial watering begins, say, in the month of February.

The seed should be put into the ground about the beginning of the rains; I have been fairly successful, however, when the seed was sown about the middle of the rains; of course, the work then can only be undertaken during a break.

Seed one year old I find much better than new seed, provided that it has been kept dry and not allowed to heat.

I do not steep the seed before sowing; as a rule, the seed lies in the beds from 6 to 8 months before germination takes place, so there can be nothing gained from steeping.

I have tried manuring the seed beds, but find that it does harm, as it encourages the production of grubs of sorts and white-ants, but the addition of ashes should never be omitted, if procurable.

I may here remark that I consider 25 to 30 per. cent. very fair germination for teak seed—I do not speak of picked seed —according to my experience; the quantity of seed should never be stinted in this country, it can generally be procured at small cost.

In my opinion, it is much better to take up new land annually for nurseries than to continue to raise plants from the same ground, although much more expensive.

The plants of the second year's crop are never so robust as the first year's plants, a heavy application of ashes certainly does help the second crop very much, but something more than ashes can give is wanting.

J. B.

Rough Timber Tramway.

As the "Indian Forester" in its opening number requests that forest officers and others would give even their ideas as taken from pocket-book notes, I venture, but somewhat timidly, to give one of mine, with a hope of its being put to practical good use in the working of our hill compartments.

The idea first suggested itself to me when ordered the other day to superintend the building of a new timber slide, the first I had ever seen.

I observed that several curves were too sharp to allow a sleeper to run, and it struck me at once that some arrangement was necessary to enable the workmen who were working in gangs under different contractors at isolated pieces of the work, to test their curves as they made them, as it would be a loss of time and money to discover defects after completion.

Several curves that to the eye appeared correct upon testing proved the reverse.

My idea was simply putting a sleeper on wheels by cutting a square hole about a foot from each end, and letting in a small wooden wheel fastened by a simple peg. These wheels were of course made of shisham or other hard wood. This plan was found to answer, and several wheeled sleepers were made and handed over to the different gangs, who were thus enabled to test their curves, as they made them without the aid of water, the gentle gradient causing the sleeper to move down smoothly.

It struck me that this plan might be applied to a tramway running in a level roadway through the different compartments.

Supposing a good level roadway to be finished, I propose to lay down two small lines on the slide principle only on a very much smaller scale. I do not know the English technical term for the local one used here, "Secunger," which is applied to the sleeper into which the slide is keyed up, it is a piece of wood of this shape 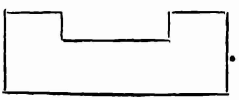 . For a single slide only one is required, whereas for a double one it might be made thus 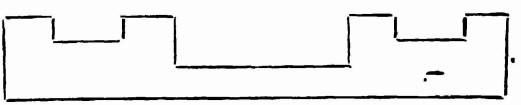 . Let it be fully understood that this parallel slide way is to be made on a very much smaller scale, as it only requires to be the width of the wheel and a little extra to allow for play, the entire height need be only 6," leaving the groove 4." Into each slide a wheeled sleeper is put and connected *within* the wheels by a strong platform—pegs to be put in to prevent the sleepers from coming into contact with the wheels which should be 1 foot in diameter, and 4 inches in breadth fastened into the ends of the sleeper by iron pins.

In loading the truck the first two layers of sleepers should be laid *breadth ways*, and the subsequent layers could be put lengthways, thus being raised well above the wheels.

Such a truck, loaded with, say, 25 to 30 sleepers, could be easily pushed along by 2 or 3 coolies, the wheels being of course kept well greased, and in case of great friction water could be turned in in several places from the hill side.

The advantages of this rough tramway are that all materials would be *at hand*, and composed mostly of waste wood from sleeper sawing.

Once started, one carpenter could keep the whole in repair.

I merely venture to send this crude idea of mine, with a hope that it may prove useful.

D.

China Blackwood.

TO THE EDITOR OF THE "INDIAN FORESTER."

SIR,—I beg to forward a few remarks on my experiments in the *Ajmere* district with the much-talked-of China Blackwood.

Mr. Robertson, Collector of Darwar, having kindly sent me last season about a *seer* of the seed, I had some sown in nursery beds, and the rest in carefully prepared pits and seed lines, at two of the forest tracts in the neighbourhood of *Ajmere*.

These pits have been dug in one case in good land on the edge of a *nalla*, where *babool* and *shisham* trees are flourishing, in another case in sandy inferior soil, also on the edge of a *nalla*, and in the third case the seed was sown in prepared seed lines on the side of a dry sandy hill.

The seed in all cases was sown in my presence just after the first rainfall in July, and most of the seed germinated in 10 days or a fortnight. After the young plants had attained the height of about one inch, there was a break in the rains of about three weeks, which killed most of the plants, notwithstanding the fact that they were shaded with long grass, and were watered artificially twice or three times.

A few plants however still remained in the nursery beds and in the pits situated on the first *nalla* referred to above, but in the two other places all the plants had disappeared when I left *Ajmere* towards the end of September.

The young plants seemed to be of a very weak and delicate nature, not half so hardy as either *babool*, *siris*, *nim* or *jhand*;

and although the China Blackwood may flourish in the dryest and most barren parts of Southern India, I am afraid there is not much chance of its succeeding on the arid hills of *Rajpootana*.

E. McA. M.

Plantation of Eucalypti.

TO THE EDITOR OF THE "INDIAN FORESTER."

SIR,—Perhaps the accompanying few notes concerning the experiments with Eucalypti, carried on in this division, will be found interesting. In August 1875, Mr. Richardson planted a few seeds in an earthen gumla, they were "E. globulus," and another kind marked by him iron bark. This, from its after-growth, seems to have been the same as that marked "E. viminalis" sent from the Conservator's office. The plants germinated in September, and in the end of December 1875 I put them out into baskets according to the Conservator's directions. The baskets avoided the necessity of moving the trees a second time, for, being of a perishable nature, they could, when the trees were planted out for good, be put into the ground as they stood and would during the first rains rot. These trees were all in Saugor. In December 1875, I sowed a great number of seed at Garhakota, of the following eight species:—

E. globulus.	E. cornuta.
E. marginata.	E. sideroxylon.
E. viminalis.	E. rostrata
E. fissilis.	E. obliqua.

These germinated at various times up to the end of January very freely, and when in the end of February I commenced transplanting them into separate baskets, I had nearly 2,000.

I will keep the two sowings apart—1st, the Saugor sowing of August 1875. As before mentioned I potted these out in baskets in the end of December 1875. I had then 23 E. globulus and five or six E. viminalis. I was unable to see much of these, as I was always in camp, but they were carefully tended and watered, and when the hot winds commenced they were put under shelter. The majority grew very well,

one E. globulus growing up to four feet in height by May, but in the end of May they suddenly died. I was out of the station, but my subordinate there reported that they appeared sickly, the top shoot drooped and then in two or three days they dried up. Two alone escaped. These I planted out in my garden in July. One E. globulus died and the other E. viminalis is dragging out a miserable existence at present. The soil they were sown and potted out in was a poor "kábar" or wheat soil.

The sowings in Garhakota were all in kábar soil, but the pottings out were, in a few cases, in alluvial and in sandy soil. I observed no difference in the result. Of the different species the E. globulus, E. cornuta, and E. fissilis germinated most freely, the second on this list being wonderfully fertile. They no sooner were put out into baskets than they began to die, but this was probably from their being too young. The way I got them out of their nursery baskets was by putting the baskets into water, and thus washing the earth out. By the beginning of May I had about 1,500, of which 1,132 died in a fortnight. The weather during these days was terribly hot and unusually oppressive. The deaths occurred principally among the kinds other than E. globulus. This tree and E. cornuta and E. rostrata seemed most able to stand the heat. All this time the trees were under a thatched cover, and were watered twice a day. From this time the deaths decreased wonderfully, but still a certain number died up to the day I transplanted them. This was done, purposely, in different soils and situations. Some were planted close along the bank of a perennial nalla. Some in a marshy spot where the water generally collects in the rains, others were planted on a height, a well-drained knoll. The results are difficult to appreciate. Death has been impartial, and selected his victims from those on the knoll equally with those in the marsh, and of the seedlings only 111 remained alive when counted a few days ago. These are distributed in all soils and situations, and consist of an equal proportion of all, save E. marginata, of which only six or seven germinated in the first instance.

The wonderful development of growth is not discernible in these Eucalypti, for my tallest tree is not five feet high.

Some seeds received from the Conservator in June were sown by me in the rains (August). These were :—

E. globulus.
E. cornuta.
E. fissilis.
E. amygdalina.
E. viminalis.

In Saugor I selected two kinds of earth, one the aforementioned "kábar," and the other decomposed sandstone taken from the lower slopes of the hills round the station. The plants germinated fairly freely in the kábar, but very poorly in the red earth. They were healthy when I last saw them last month. Of the same seed I sent down a parcel to Garhakota to be sown. They were sown in three kinds of earth one "kábar," the second hill detritus with lime mixed in it and the third river alluvium. These have been an utter failure.

There was one E. globulus in the Police gardens in Saugor, the only one left of many trees. This grew to a height of 20 feet between December 1874 and June 1876, and then without rhyme or reason died. The Cantonment Magistrate of Saugor has some still alive, and Major Loch, the Deputy Commissioner, has been, I believe, successful up to the present. Various other experiments were tried in the station. One gentleman, who had been in Australia, tried to grow two kinds, globulus and another, without water and on hilly slopes, with very little soil. They thrived (six of them) till the rains, when they died off at once. Colonel Kincaid, Political Agent, Sehore, was successful, I believe.

With regard to the few young trees I have now in Saugor, I have quite given up hopes of their ever growing to any height, and I think, with reference to Saugor at any rate, that the Eucalypti are a failure. Had even a greater percentage of the trees in Garhakota survived, I do not think Government would be justified in carrying on the experiment, for the expenditure would be by far too heavy, as the growth here is nothing like as rapid as it is in the Nilgiris.

G. FOSTER,
Assistant Conservator.

Amber.

FROM the *Revue des Eaux et des Forêts* for September 1876 (p. 348), the following may be reproduced :—

"Yellow amber, which Eastern nations use so much for rosaries, beads, and mouthpieces of pipes, is a forest product. An analysis made by Schrutter gives the following results :—

Carbon	...	... 78·82
Hydrogen	...	... 10·23
Oxygen	...	... 10·90

This composition sufficiently proves the vegetable origin of amber, if indeed it were not otherwise established by its structure and by the circumstances under which it is found, that it is nothing more than a resin modified by long burial in the soil.

The amber which was formerly found on the coast of Sicily appears to have been completely exhausted It is now the shores of the Baltic that supply the whole world. These coasts were once covered with vast resinous forests which have left numerous deposits of resin in the soil, and these deposits are at present actively worked. In some places amber is obtained from excavated mines, but more often pieces borne by the sea towards the shore are fished up with nets. Several steamboats are employed on this trade on the coasts of Koenigsberg.

The right of amber collecting is a royalty in Prussia. It brings a revenue of 600,000 francs (Rs. 2,40,000) annually to the State. Amber is not the only fossil resin used in industrial art. We have published in the number for May 1876 a notice of the gum copal which is the produce of several *Hymeneas* and of *Eleocarpus copalifera*, which is found in abundance in the forests of Eastern Africa.

New Zealand also furnishes a quantity of an important resin secreted by the "Kauri" pine (*Dammara lanceolata*).

This resin drips on to the soil where it forms accumulated masses, which are now extensively worked. Kauri resin is used in the manufacture of varnishes, and is worth at Auckland 1,250 francs (£50) per ton."

India-Rubber.

TO THE EDITOR OF THE "INDIAN FORESTER."

DEAR SIR,—On page 62, Vol. II., No. I., Kadhandhi mentions several species of trees, which are likely to produce India-rubber. Will any one inform me, whether previous attempts have been made to extract the milk-like juice that exudes from the outer bark of the Bassia latifolia? If so, is it of any value? When inspecting the forests a few days ago, I saw a tree with some of the juice running from a wound, which had been made in the bark. I collected a small quantity and found it to be extremely adhesive in its unprepared state; and when drawn out, it stretched to a great extent, contracting again nearly as rapidly, very much in the same way as prepared India-rubber. The small quantity I had procured I rolled up into a ball (about the size of a large pea), and pulled it out to a length of three feet. I also found that it will stretch to the thinness of ordinary thread without snapping. The hillmen (Koyas) use it as bird-lime, smearing some of the unprepared juice over the tops of the stalks of a hill species of Sorghum, close to the seed. It is said never to fail in securing parrots. The hillmen collect it in the following manner:—Firstly, they cut a square piece from the outer, reddish colored, bark (which contains the fluid). This bark is generally about three-fourths of an inch in thickness. The incision is four inches square, and one angle is always made to point downwards. Under this a circular hole is scooped out, a bamboo is then firmly placed into it, and left until the required quantity has accumulated. I have never seen any mention made about this juice in works on the Flora of India, although the other products derived from this tree, which are commonly known, are always entered.*

I am, Dear Sir,
Yours obediently,
E. H. B.

1*st of December* 1876.

* It is well known that a gum exudes from cracks and incisions in the bark. See D. Brandis' Forest Flora, page 290.—THE EDITOR.

Distribution of Conference Reports.

TO THE EDITOR OF THE "INDIAN FORESTER."

'DEAR SIR,—Your reviewer, writing on the Report of the Forest Conference of 1875, laments that so many papers brought before the conference were omitted, and that so much interesting conversation has been left unreported; but how much more do we lament who have not seen the Report at all. The review also speaks of a nice octavo volume containing a report on the Conference of 1873. These two volumes would adorn the shelves of our divisional libraries, but they are not in mine, nor, I believe, in any divisional library in Assam.

Are divisions in other provinces kept in the same state of darkness, or are only our Assamese jungles deemed to be too dense for the light of Simla to penetrate. Perhaps the books are to be obtained by purchase, but I have not seen them advertised for sale, or would gladly have bought them, and should then probably value them more, than if they had been distributed. Can you kindly help me in this matter ?*

Yours faithfully,
W. R. F.

ERRATA.

DEAR SIR,—I write to suggest the following corrections in my "Notes on the effects of grazing in sal forests" which appeared in the last "Forester :"—

In the fourth paragraph after "Eastern Doars" should be added "reserved forests." This was, I believe, a mistake in the manuscript for which I apologize.

In the eighth paragraph "burned year after," should be "burned year after year." In the eighteenth paragraph "grazing of the long grass acts as a nutriment" should be "grazing of the long grass acts as a 'nettoiement.'" This last word is probably strange to many of the readers of the "Forester," but until we get an authoritative book of technical terms, it is difficult to replace it by an English equivalent.

It implies the clearing of inferior species, which act as a cover to the young growth of the Forest.

Yours truly,
W. R. F.

---

* Forest Officers in Bengal have been supplied by Government with one copy each, and we were under the impression that this had been done in every province.—THE EDITOR.

IV. SHIKAR AND TRAVEL.

Dangers of German Forest Officers.

TO THE EDITOR OF THE "INDIAN FORESTER."

SIR,—In the opening article of the July number of your journal, B. H. B. P. remarks that in Europe "fierce poaching frays and even attempts on the life of officials are not unknown." Would that these words expressed the full extent of the evil! Those who have never been in the districts of Germany where poachers abound can scarcely be aware of the extent to which this horrible trade is carried on, or of the dangers to which the forest officer is exposed. In the Hartz mountains, for example, or in Solingen in Hanover "fierce poaching frays" are not only "not unknown," but are of everyday occurrence. The poachers form themselves into regularly organized bands, and many and many a forest officer has fallen a victim to these desperate ruffians.

The inhabitants of these mountains are a rough and barbarous, but very hardy race—splendid men for forest or mining work, fine shikarees, but at the same time ancient poachers. The foresters themselves, many of whom are born and bred in the mountains, and have inherited their profession, are made of the same stuff, and are just the men to deal with poachers, who will not hesitate to take a life in order to save themselves from punishment. The arrest of a poacher must necessarily be a more dangerous and difficult work than that of any other criminal, from the very fact of his having a gun, which it is so easy to fire off at his adversary when escape is hopeless. But it is not always to save themselves that poachers attack forest officers. A most heart-rending story was once related to me of a forester who, while walking one night with his two children unarmed through the forest, met a poacher carrying a roebuck. Without weapons of course he was helpless. The poacher threw the roebuck on the ground, and deliberately shot down the

forester between his two children, who were left standing alone in the night beside their dead father. The motive of this crime was probably revenge.

Any one who has spent any time in the districts I have named must have heard countless stories such as this. One of the most tragical occurred a few years ago in a village called Lauterberg. Many an Indian forester will remember the beautiful valley in the Hartz, with its crystal, icy streams, its graceful beeches, its sombre, impressive firs, its rich emerald pastures fringing the velvet, forest-clad mountains. Nor will all have forgotten those "Vierzehnender" stays, and the nights in the rutting season spent in the "Kötke," sustained by "Köhlersuppe"* and "Schnaps." Those boar, the shooting of one of which brought us more glory than the killing of twenty tigers in India. Many too will have seen the beech tree with the name carved in its bark, religiously preserved in memory of the victim in the sad event which I am now about to relate :—

L. B., a young Hanoverian, was, in the year 1868 or 1869, studying forestry in Lauterberg in the capacity of forest elève, or as we should say, Forest probationer just as we prospective Indians were doing two years later in the same place. He cannot have been more than 17 years old, and having of course no official powers, was warned by the Oberförster never to interfere with poachers, but should he chance upon them, to withdraw quietly, since he was unable to bring a poacher to justice unless indeed he could drag him bodily, gun in hand, to some regular official. But this warning had little effect upon the plucky and spirited young forester. Whilst stalking a stag one evening he suddenly met a man with a gun, and instantly gave chase. The man crossed the mountain, and down again the other side. L. B., in hot pursuit, dashed down the hill after him, and was just in the act of collaring a man twice his own size, when the ruffian turned round and shot him through the chest. Later in the night he was found by the Oberförster who, on his pupil not returning home, had gone out with a party to

* "Köhlersuppe," or charcoal burner's soup, is a condiment which I would particularly recommend to the attention of epicures. It is easily prepared by boiling (black) bread in water, and adding, if they are at hand, a little butter and salt according to taste.

search for him. He was carried home in a dying state, and died on the next day. Fortunately they were able to take his deposition, and the wretched man who had committed the crime was brought to justice. It is scarcely credible, but yet true, that this man, though convicted of the crime, is still alive—was alive at least in 1872. A more dastardly murder could perhaps scarcely be imagined.

The feeling aroused by this terrible deed was tremendous. Every forest officer within hail, as may be supposed, followed the poor boy to his grave. A greater blow was dealt to poaching in the Hartz than any laws could have effected. An incident of the trial will serve to show how strong was the feeling of horror even amongst men of the same class as the criminal. After firing the shot the man had run to the town in an incredibly short time, and had shown himself in the streets, thinking in this way to be able to prove an *alibi*. He indeed would have escaped, but that at the last moment one of his companions who had been out with him at the time stepped forward and gave evidence against him, stating that he was determined at any cost to see this man punished.

Since this occurrence poaching has been decidedly on the decrease in the Hartz. At least up to 1872, if I am not mistaken, no more murders were heard of. But poaching is still very far from having ceased entirely. A small village called Bennekenstein I remember to have been a hotbed of poachers. From this village gangs of 20 or 30 men would wander right away as far as the Brocken 20 miles distant, in pursuit of the deer for which they easily found a market. Whenever they became very bad, a detachment of military was quartered on the village; there was then an end to the poaching for a short time, and it commenced again when the soldiers were gone.

The Hartz, as is well known, abounds in romantic legends and superstitions, and it would be odd if none of them were connected with the poachers. Those who are doomed to die by the hands of poachers are, it is said, forewarned by a flashing light. A forest officer once related to me that, as he was walking through a dark forest one night, he was suddenly startled by a streak of light flashing right across his path. To

appreciate the effect of such an apparition at such a time, we must call to mind the pitchy darkness of a closed spruce forest on a dark night. A white pocket-handkerchief held up before the face is totally invisible. My friend was verily no coward, and was not given to superstition, but he confesses to his hair having stood on end as he walked up to examine into the mystery. He found? A small decline or precipice, an over-hanging birch tree and a heap of ashes. Some wood-cutters had gone away leaving the remains of their fire not quite extinguished. These flaring up anon and again, when a gust of wind passed over, lighted up the silvery bark of the birch tree which appeared like a streak of light flashing across the forest.

I remain, Sir,

Yours obediently,

HUBERTUS.

V. Extracts from Official Gazettes and from other Official Publications.*

1.—Gazette of India—

The 5th October 1876.—No. 1039.—*Mr. H. C. Hill.* Assistant Conservator of Forests of the 2nd Grade, attached to the Forest Survey Branch, is transferred to British Burma.

The 17th October 1876.—No. 1109.—*Mr. T. G. B. Atkinson,* Sub-Assistant Conservator of Forests in the Punjab, is transferred to the Central Provinces, on probation for one year, from the date on which he joins the Forest Department of those Provinces.

The 21st October 1876.—No. 1124.—Privilege leave for one month from the 15th September to the 14th October 1876 was granted to *Mr. H. C. Hill,* Assistant Conservator of Forests of the 2nd Grade, attached to the Forest Survey Branch.

No. 1126.—*Mr. E. F. Litchfield,* who, in Notification No. 893, dated the 8th ultimo, was appointed to officiate as a Sub-Assistant Conservator of Forests, having joined the Survey Branch of the Forest Department on the 16th instant, his appointment to the Department will have effect from that date, instead of from the 8th September 1876.

The 7th November 1876.—No. 1216.—*Lieutenant-Colonel G. F. Pearson,* M.S.C., Conservator of Forests of the 1st Class in the North-Western Provinces, having retired from the service, the Hon'ble the President in Council has been pleased to make the following promotions among Conservators of Forests, with effect from the 1st August 1876 :—

Mr. B. H. Baden-Powell, C.S., from the 2nd to the 1st Class.

* Several numbers of *Gazettes* have not reached us.

Major W. J. Seaton, M.S.C., from the 3rd to the 2nd Class.

Captain J. C. Doveton, M.S.C., from the 4th to the 3rd Class.

The 27th November 1876.—No. 1245.—The Hon'ble the President in Council has been pleased to sanction the following transfers of Officers of the Forest Department :—

Mr. E. McA. Moir, Officiating Assistant Conservator of Forests of the 1st Grado, from Ajmere to the Punjab.

Mr. W. S. Hillier, Assistant Conservator of Forests of the 2nd Grade, from the Punjab to Oudh.

No. 1249.—*Mr. G. W. Strettell*, Deputy Conservator of Forests of the 2nd Grade in British Burma, is granted two years' furlough to Europe, under Section 10 (*a*) of the Civil Leave Code, with effect from the 9th August 1876.

The 29th November 1876.—No. 1261.—*Mr. O. Creig*, Assistant Conservator of Forests of the 3rd Grade, who, in Notification No. 886, dated the 11th August last, was attached to the Forest Survey Branch, for a period of twelve months, rejoined his appointment in the Forest Department of the North-Western Provinces on the 10th October 1876.

No. 1265.—*Major W. J. Seaton*, Conservator of Forests of the 2nd Class in British Burma, having returned from furlough on the 6th October 1876, *Mr. B. Ribbentrop*, who, in Notification No. 353, dated the 22nd March 1875, was appointed to officiate for him, will, as a temporary measure, continue to officiate as an additional Conservator of Forests of the 4th Class in that Province from the date of *Major Seaton's* return.

The 5th December 1876.—No. 1318.—The Hon'ble the President in Council has been pleased to appoint *Lieutenant C. T. Bingham*, of the Bengal Staff Corps, to officiate as an Assistant Conservator of Forests of the 1st Grade in British Burma.

The 8th December 1876.—No. 1326.—*Captain J. C. Doveton* having, in Notification No. 1216, dated the 7th

ultimo, been promoted to the 3rd Class of Conservators, the Hon'ble the President in Council has been pleased to confirm *Mr. George Greig* in his appointment as Conservator of Forests of the 4th Class in the North-Western Provinces, with effect from the 14th November 1876.

The 3rd January 1877.—No. 1393.—The Hon'ble the President in Council is pleased to make the following promotions in the Burma Forest Department:—

Mr. J. Adamson, officiating as Deputy Conservator of the 3rd Grade, is confirmed in that grade.

Mr. A. E. Wild, Assistant Conservator of Forests of the 1st Grade, is promoted to the 3rd Grade of Deputy Conservators.

Mr. M. H. Ferras, B.A., Assistant Conservator of Forests of the 2nd Grade, and at present officiating as Inspector of Schools, is promoted to the 3rd Grade of Deputy Conservators.

Mr. R. H. C. Whittall, Assistant Conservator of Forests of the 2nd Grade, is promoted to the 3rd Grade of Deputy Conservators.

Mr. H. C. Hill is promoted from the 2nd to the 1st Grade of Assistant Conservators, and is appointed to officiate as a Deputy Conservator of the 3rd Grade from the 10th November 1876, on which date he reported his arrival in Burma.

Mr. E. P. Popert and *Mr. C. F. Nepean* are promoted from the 2nd to the 1st Grade of Assistant Conservators.

These promotions, excepting that of *Mr. Hill*, will take effect from the 13th October 1876.

The 6th January 1877.—No. 1396.—In modification of the order contained in the Notification of this Department, No. 1393, dated the 3rd January 1877, *Mr. H. C. Hill* is promoted from the 2nd to the 1st Grade of Assistant Conservators, with effect from the 13th October 1876; and is appointed to officiate as a Deputy Conservator of Forests of the 3rd Grade, from the 10th of November 1876.

The 11th January 1877.—No. 25.—The Hon'ble the President in Council is pleased to make the following promotions in the Forest Department under the Government of India, with effect from the 13th October 1876 :—

From the 1st Grade of Assistant Conservator to the 3rd Grade of Deputy Conservator :—

Mr. W. Bereton	...	North-Western Provinces.
„ C. J. Ponsonby	...	Oudh.
„ E. Sparling	...	Punjab.
„ C. Bagshawe	...	North-Western Provinces.
„ J. C. MacDonell	...	Bengal.
„ I. Macpherson	...	Mysore.
„ W. G. Allan	...	North-Western Provinces.
Captain J. E. Campbell	...	North-Western Provinces.

Mr. A. Pengelly, M.A., Assistant Conservator of Forests of the 1st Grade in the Punjab, to officiate in the 3rd Grade of Deputy Conservators, vice *Mr. H. Leeds* on leave.

From the 2nd to the 1st Grade of Assistant Conservators :—

Mr. W. Righy	...	Punjab.
„ R. S. Dodsworth	...	Oudh.
„ E. McA. Moir	...	Punjab.
„ N. Daly	...	Mysore.
„ A. R. Grant	...	North-Western Provinces.
„ H. H. Davis	...	Bengal.
„ C. F. Elliott	...	Punjab.
„ R. H. M. Ellis	...	Punjab.
„ G. G. Minniken	...	Punjab.
„ W. H. Reynolds	...	Surveys.
„ J. M. Braidwood	...	North-Western Provinces.
„ J. S. Gamble, B.A.	...	Bengal.
„ W. P. Thomas	...	Central Provinces.
„ W. Shakespear	...	Assam.
„ E. Forrest	...	Punjab.
„ J. T. Jellicoe	...	Mysore.

No. 26.—The following lists of Deputy and Assistant Conservators of Forests under the Government of India,

arranged according to the re-organized scale recently sanctioned, are published for general information :—

I.—General List.

Nos.	Names.	Provinces.	Substantive Pay.	Remarks.
	I.—Deputy Conservators (23.)		Rs.	
1	Mr. R. P. Colvin ...	N.-W. Provinces...	900	
2	Captain F. Baily, R.E. ...	Surveys ...	900	
3	*Mr. H. Leeds* ...	*Central Provinces*	900	*Absent on leave. Expected to return 15th June 1877.*
4	Lieut.-Col. C. Batchelor, 3rd B.E.L.C. ...	Punjab ...	900	
5	Lieut.-Col. W. Stenhouse, late 32nd M.N.I. ...	Punjab ...	900	
6	Mr. W. Jacob ...	Bengal ...	700	
7	,, I. E. O'Callaghan ...	N.-W. Provinces...	700	
8	,, Birnie Browne ...	Punjab ...	700	
9	Major H. C. T. Jarret, V.C., S.C. ...	Mysore ...	700	
10	Mr. C. F. Amery ...	N.-W. Provinces...	700	
11	,, R. H. E. Thompson ...	Central Provinces	700	
12	,, A. L. Home ...	India ...	700	Draws a personal allowance of Rs. 200 as Assistant to the Inspector-General of Forests. Total Rs. 900.
13	Captain C. W. Losack ...	Central Provinces	500	
14	Mr. A. T. Drysdale ...	Berar ...	500	Draws a personal allowance of Rs. 200. Total Rs. 700.
15	,, G. Mann ...	Assam ...	500	Draws a personal allowance of Rs. 200. Total Rs. 700.
16	,, W. Brereton ...	N.-W. Provinces	500	
17	,, C. J. Ponsonby ...	Oudh ...	500	
18	,, E. Sparling ...	Punjab ...	500	
19	,, C. Bagshawe ...	N.-W. Provinces	500	
20	,, J. C. MacDonell ...	Bengal ...	500	
21	,, I. Macpherson ...	Mysore ...	500	
22	,, W. G. Allan ...	N.-W. Provinces	500	
23	Captain J. E. Campbell ...	N.-W. Provinces	500	
	II.—Assistant Conservators (18 of 1st and 28 of 2nd and 3rd Grades, Total 46.)			
1	Mr. E. Ludlow ...	Mysore ...	450	
2	,, *A. Pengelly*, M.A. ...	*Punjab* ...	450	*Officiating as Deputy Conservator, 3rd Grade, on Rs. 500, vice Mr. Leeds.*
3	,, W. Righy ...	Punjab ...	450	
4	,, R. S. Dodsworth ...	Oudh ...	450	
5	,, E. McA. Moir ...	Punjab ...	450	
6	,, N. Daly ...	Mysore ...	450	
7	,, A. R. Grant ...	N.-W. Provinces	450	

I.—General List.—(*Continued.*)

Nos.	Names.	Provinces.	Substantive Pay.	Remarks.
	II.—Assistant Conservators—(Continued.)		Rs.	
8	Mr. H. H. Davis ...	Bengal ...	450	
9	„ C. F. Elliott ...	Punjab ...	450	
10	„ R. H. M. Ellis ...	Punjab ...	450	
11	„ G. G. Minniken ...	Punjab ..	450	
12	„ W. H. Reynolds ...	Surveys ...	450	
13	„ J. M. Braidwood ...	N.-W. Provinces	450	
14	„ J. S. Gamble, B.A. ...	Bengal ...	450	
15	„ W. P. Thomas ...	Central Provinces	450	
16	„ W. Shakespear ...	Assam ...	450	
17	„ E. Forrest ...	Punjab ...	450	
18	„ J. T. Jellicoe ...	Mysore ..	450	Attached temporarily to the Survey Branch.
19	„ W. S. Hillier ...	Oudh ...	350	
20	„ G. H. Foster ...	Central Provinces	350	
21	„ L. A. W. Rind ...	N.-W. Provinces	350	
22	„ J. McKee ...	Central Provinces	350	
23	„ E. P. Dansey ...	N.-W, Provinces	350	
24	„ F. B. Dickinson ...	Mysore ...	350	
25	„ D. E. Hutchins ...	Mysore ...	350	
26	„ W. R. Fisher, B.A. ...	Assam ...	350	
27	„ E. E. Fernandez ...	Central Provinces	350	
28	„ A. Smythies, B.A. ...	Central Provinces	350	
29	„ W. Johnstone, L.C.E.	Bengal ...	350	
30	„ F. O. LeMerchand ...	Punjab ...	250	
31	„ F. C. Hicks ...	Mysore ...	250	
32	„ S. E. Wilmot ...	Oudh ...	250	
33	„ G. F. Prevost ...	Berar ...	250	
34	„ F. d'A. Vincent ...	Punjab ...	250	
35	„ E. Fuchs ...	Bengal ...	250	
36	„ E. D. M. Hooper ...	Central Provinces	250	
37	„ H. Moore ...	Central Provinces	250	
38	„ W. E. D'Arcy ...	Assam ...	250	
39	„ A. J. Mein ...	Assam ...	250	
40	„ E. G. Chester ...	Bengal ...	250	
41	„ F. B. Manson ...	Bengal ...	250	
42	„ F. H. Bonham-Carter	Bengal ...	250	
43	„ J. Ballantyne ...	Berar ...	250	Draws a personal allowance of Rs. 50. Total Rs 300.
44	„ G. A. Richardson ...	Bengal ...	250	
45	„ W. King ...	Mysore ...	250	
46	„ O. Greig ...	N.-W. Provinces	250	

II.—British Burma List.

Nos.	Names.	Substantive Pay.	Remarks.
		Rs.	
	I.—Deputy Conservators (7.)		
1	Mr. B. Ribentrop ...	700	Appointed temporarily as Additional Conservator on Rs. 1,000.
2	„ M. J. Slym ..	700	
3	„ *G. W. Strettell* ...	700	*Absent on leave. Expected to return, 9th August* 1878.
4	„ J. Adamson ...	500	
5	„ A. E. Wild ...	500	
6	„ *M. H. Ferrars*, B.A. ...	500	*Officiatiog as Inspector of Schools in British Burma.*
7	„ R. H. C. Whittal ...	500	
	II.—Assistant Conservators (8.)		
1	*Mr H. C. Hill* ...	450	*Officiating as Deputy Conservator, 3rd Grade, on Rs.* 500, vice *Mr. Strettell.*
2	„ E. P. Popert ...	450	
3	„ C. F. Nepean ..	450	
4	Lieut. C. F. Bingham, B.S.C. ...	450	Officiating Assistant Conservator, 1st Grade.
5	Mr. R. N. Anstruther ...	250	
6	„ J. W. Oliver ...	250	
7	„ P. J. Carter ...	250	
8	„ J. Nisbett ...	250	
	„ *C. W. Palmer* ...	200	*Draws a personal allowance of Rs.* 50 *until promotion. Total Rs.* 250 *Has been appointed to officiate as Assistant Conservator.*

The 12*th January* 1877.—No. 33.—With the consent of the Government of the North-Western Provinces, and with reference to paragraph 7 of the Resolution of the Government of India in this Department, No. $\frac{20}{857-876}$, dated the 3rd August 1875, *Mr. E. A. Down*, Sub-Assistant Conservator of Forests in the North-Western Provinces, is attached to the Forest Survey Branch for a period of twelve months.

The 26*th January* 1877.—No. 110.—*Mr. E. A. Down*, Sub-Assistant Conservator of Forests in the North-Western Provinces, who, under Notification No. 33, dated the 12th instant, was attached to the Forest Survey Branch for a period of twelve months, joined that Department on the 25th November last.

The 2nd February 1877.—No. 137.—The privilege leave of absence for three months granted by the Chief Commissioner of Mysore, in his Notification No. 227, dated the 21st September 1876, to *Mr. D. E. Hutchins*, Assistant Conservator of Forests, is commuted to leave on medical certificate for eight months, with effect from the 25th September 1876.

2.—CALCUTTA GAZETTE—

The 2nd November 1876.—*Mr. W. Jacob*, Deputy Conservator of Forests, Sunderbuns Division, is allowed leave for one month and ten days, under Section 21, Chapter VI of the Civil Leave Code, with effect from the 6th December 1876.

M. H. H. Davis, Assistant Conservator of Forests, 2nd Grade, is appointed to have charge of the Sunderbuns Forest Division during the absence on leave of *Mr. W. Jacob*, or until further orders.

The 20th November 1876.—*Mr. E. Fuchs* is promoted from the 3rd to the 2nd Grade of Assistant Conservators, with effect from the 11th October 1876.

The 22nd January 1877.—The following transfers of officers in the Forest Department are sanctioned :—

Mr. W. Jacob, Deputy Conservator, from the Sunderbuns Division to the Palamow Division.

Mr. G. A. Richardson, Assistant Conservator, from the Palamow Division to the charge of the Sunderbuns Division.

Mr. H. H. Davis, Assistant Conservator, from the temporary charge of the Sunderbuns Division to the Chittagong Division.

Mr. E. G. Chester will remain attached to the Chittagong Division until further orders.

Mr. G. A. Richardson is promoted from the 3rd to the 2nd Grade of Assistant Conservators, with effect from the 15th January 1877.

In supersession of the orders of the 20th November 1876, *Mr. E. Fuchs* is promoted from the 3rd to the 2nd Grade

of Assistant Conservators, with effect from the 13th October 1876.

The 30th January 1877.—*Mr. H. H. Davis,* Assistant Conservator of Forests, Chittagong Division, having returned to duty on the forenoon of the 15th December 1876, the unexpired portion of the leave granted to him under orders of the 29th August 1876 is cancelled.

The 6th February 1877.—*Mr. J. S. Camble,* Assistant Conservator of Forests, Darjeeling Division, is employed on special duty from the 10th February to the 31st March 1877, for the purpose of preparing a list of the trees found in the Darjeeling district.

3.—North-Western Provinces Gazette—

The 23rd September 1876.—No. 165F-C.—In supersession of Notification No. 22F-C. of 3rd June 1876, the following promotion is made in the Forest Department :—

Name.	Present Grade.	Grade to which promoted.	With effect from	Nature of Promotion.	Remarks.
J M Braidwood.	Asst. Conservator, 2nd Grade.	Asst. Conservator, 1st Grade.	3rd May 1876.	Temporary	*Vice* Mr. C. Bagshawe on furlough.

The 9th October 1876.—No. 178F-C.—The services of *Mr. A. Pengelly,* Assistant Conservator, 1st Grade, are placed at the disposal of the Government of Panjáb.

No. 182F-C.—*Mr. W. G. Allen,* Officiating Deputy Conservator, 3rd Grade (transferred from the Panjáb to these Provinces), is posted to the charge of the Kumaun Forest Division and Ránikhet Sub-division, *vice* Captain J. E. Campbell.

Mr. W. G. Allen, Officiating Deputy Conservator, 3rd Grade (transferred from the Panjáb to these Provinces), is posted to the charge of the Ránikhet Sub-division, *vice* Captain J. E. Campbell. (This is in supersession of the Notification bearing similar number and date

published in *Gazette*, dated 14th October 1876, page 1313.)

The 17th October 1876.—No. 197F-C.—*Mr. C. F. Amery*, Deputy Conservator, 2nd Grade, is granted one month's privilege leave, with effect from the 23rd instant, or such subsequent date as he may avail himself of the same.

The 19th October 1876.—No. 198F-C.—The following promotions are made in the Forest Department :—

Names.	Present Grade.	Grade to which promoted.	With effect from	Nature of Promotion.	REMARKS.
Grant, Mr. A. R.	Asst. Conservator, 2nd Grade.	Asst. Conservator, 1st Grade.	1st April 1876.	Temporary	Promoted under orders of Government of India.
Campbell, Capt. J. E.	Ditto ...	Ditto ...	5th Feby. 1876.	Permanent.	Ditto.
Pengelly, Mr. A.	Ditto ...	Ditto ...	8th Feby. 1876.	Ditto...	Ditto.

This cancels Notification No. 22F-C, dated 3rd June 1876.

The 18th November 1876.—No. 345F.—With reference to Notification No. 197F-C., dated 17th ultimo, *Messrs. C. F. Amery*, Deputy Conservator, 2nd Grade, and *O'Greig*, Assistant Conservator, 3rd Grade, respectively made over and received charge of the Bhagirathi Division on the afternoon of the 23rd idem.

No. 346F.—*Mr. C. F. Amery*, Deputy Conservator, 2nd Grade, availed himself on the 23rd October 1876 of the leave granted to him in Notification No. 197F-C., dated 17th idem.

The 22nd November 1876.—No. 357F.—With reference to Government of India Notification No. 886, dated 11th August 1875, *Mr. O'Greig*, Assistant Conservator of Forests, 3rd Grade, joined the Dehra Dún Forest Division on the 10th October 1876.

The 23rd November 1876.—No. 361F.—*Mr. C. Bagshawe*, Assistant Conservator of Forests, 1st Grade, who

reported his return from the leave granted to him in Notification No. 78F., dated 22nd February 1876, on the 7th November 1876, is granted the usual subsidiary leave to rejoin his appointment.

No. 363F.—Notification No. 165F-C., dated 23rd September 1876, giving temporary promotion to *Mr. J. M. Braidwood*, Assistant Conservator, 2nd Grade, is hereby cancelled.

The 4th December 1876.—No. 380F.—*Messrs. E. P. Dansey*, Assistant Conservator, 2nd Grade, and *E. A. Down*, Sub-Assistant Conservator, Jaunsár Division, are transferred respectively to the Garhwál and Dehra Dún Divisions.

No. 382F.—*Mr. A. Pengelly*, Assistant Conservator, 1st Grade, on his temporary transfer to the Ránikhet Sub-division, made over, and *Mr. J. E. O'Callaghan*, Officiating Conservator, received, charge of the Dehra Dún Division on the afternoon of the 14th October 1876.

No. 383F.—*Captain J. E Campbell* and *Mr. A. Pengelly*, Assistant Conservators, 1st Grade, respectively made over and received charge of the Ránikhet Sub-division on the afternoon of the 26th October 1876.

No. 385F.—*Mr. G. Greig*, Officiating Conservator of Forests, who reported his return on the 7th November 1876, from the leave granted to him in G. O. G. G. No. 282, dated 30th March 1876, is granted the usual subsidiary leave to rejoin his appointment.

No. 386F.—With reference to Notification No. 191F., dated 13th May 1876, *Mr. J. E. O'Callaghan*, Deputy Conservator, and *Mr. G. Greig*, Officiating Conservator, respectively made over and received charge of the office of Conservator of Forests on the forenoon of the 14th November 1876.

The 7th December 1876.—No. 394F.—*Mr. C. F. Amery*, Deputy Conservator, 2nd Grade, returned on the afternoon of the 23rd November 1876, from the leave granted to him in Notification No. 197F-C., dated 17th October 1876, and received charge of the Bhagirathi Division from *Mr. O. Greig* on the same date.

The 11*th December* 1876.—No. 396F.—Leave on medical certificate for a period of one year is granted to *Sheikh Mohi-ud-din*, Sub-Assistant Conservator of Forests, in extension of similar leave granted to him in Notification No. 54F-C., dated 27th June 1876, with effect from the 23rd January 1877.

The 12*th December* 1876.—No. 402F.—With reference to Notification No. 361F., dated 23rd November 1876, *Mr. L. A. W. Rind* and *Mr. C. Bagshawe*, Assistant Conservators, 2nd and 1st Grades respectively, made over and received charge of the Jaunsár Forest Division on the afternoon of the 20th November 1876.

No. 404F.—*Mr. W. R. J. Brereton*, Assistant Conservator, 1st Grade, who reported his return on 7th November 1876, from the leave granted to him in Notification No. 43F-C., dated 10th April 1875, is granted the usual subsidiary leave to enable him to rejoin his appointment.

The 21*st December* 1876.—No. 418F.—With reference to Notification No. 380F., dated 4th December 1876, *Mr. E. A. Down*, Sub-Assistant Conservator, joined the Dehra Dún Division on the 24th November 1876.

The 15*th January* 1877.—No. 14F.—With reference to Notification No. 361F., dated 23rd November 1876, *Mr. C. Bagshawe*, Assistant Conservator of Forests, 1st Grade, entered on his duties on the forenoon of the 15th November 1876.

4.—Punjab Gazette—

The 14*th November* 1876.—No. 318F.—*Appointment.*—*Mr. E. McA. Moir*, Assistant Conservator of Forests, Ajmere, whose services have been placed at the disposal of the Punjab Government, is appointed to the charge of the Fuel Reserve Northern Division, with effect from the afternoon of the 12th October 1876, *vice Mr. W. S. Hillier*, Assistant Conservator of Forests, transferred to Oude.

The 24*th November* 1876.—No. 331F.—*Transfer.*—*Mr. A. Pengelly*, Officiating Deputy Conservator of Forests,

transferred from the North-Western Provinces to the Punjab, is appointed to the charge of the Ravi Division, with supervision of the demarcation of the Reserves in the Chamba State, both in the Chenab and Ravi Divisions.

The 6th December 1876.—No. 342F.—*Leave.—Mr. G. G. Minniken,* Assistant Conservator of Forests, Punjab, has obtained privilege leave of absence for thirty days, with effect from the 25th November 1876.

The 10th January 1877.—No. 7F.—*Leave.*—It is hereby notified that *Mr. J. S. Mackay,* Sub-Assistant Conservator of Forests, Ravi Division, obtained one year's furlough to Europe on medical certificate, commencing from the 11th March 1876, together with ten days' subsidiary leave, with effect from the 1st idem.

Mr. Mackay reported his arrival at Bombay on the 27th November 1876 on return from leave, and rejoined the Ravi Forest Division, to which he has been temporarily posted on the 2nd December 1876.

The 17th January 1877.—No. 18F.—*Leave.—Mr. F. D. A. Vincent,* Assistant Conservator of Forests, Jhelum Division, has obtained privilege leave of absence for three months, with effect from the 8th January 1877.

5.—OUDH GAZETTE—

The 15th November 1876.—No. 4158.—*Forests.*—The Officiating Chief Commissioner is pleased to promote *Mr. S. E. Wilmot,* Assistant Conservator of Forests, 3rd Grade, to the 2nd Grade from this date.

The 21st November 1876.—No. 4279.—*Mr. Hillier,* Assistant Conservator of Forests, whose services have been placed at the disposal of the Chief Commissioner, reported his arrival at Lucknow on the afternoon of the 20th October 1876.

The 9th December 1876.—No. 4527.—*Mr. C. J. Ponsonby,* Officiating Deputy Conservator of Forests, Bahraich and Gonda Division, is granted privilege leave of absence for twenty-three days, with effect from the afternoon of the 15th October 1876 to the afternoon of the 7th November 1876.

6.—CENTRAL PROVINCES GAZETTE—

The 21st October 1876.—No. 3895.—Fifteen days' privilege leave of absence is granted to *Captain C. W. Losack*, Deputy Conservator of Forests, from the 4th November next, or the subsequent date on which he may avail himself of it.

The 22nd November 1876.—No. 4373.—*Captain C. W. Losack*, Deputy Conservator of Forests, availed himself of the fifteen days' privilege leave granted to him by Notification No. 3895, dated 21st ultimo, on the 6th instant, before noon.

The 28th November 1876.—No. 4454.—*Captain C. W. Losack*, Deputy Conservator of Forests, returned from the privilege leave granted to him by Notification No. 3895, dated 21st ultimo, and resumed charge of the Northern Division, from *Mr. H. Moore*, Assistant Conservator, on the 15th instant, before noon.

7.—BRITISH BURMA GAZETTE—

The 20th November 1876.—No. 176.—*Mr. H. C. Hill*, Assistant Conservator of Forests, 2nd Grade, reported his arrival in Rangoon on the forenoon of the 10th instant.

No. 177.—*Mr. J. W. Oliver*, Assistant Conservator of Forests, 3rd Grade, assumed charge of the Prome Forest Division on the 28th October 1876.

No. 14.—*Mr. Arthur Hamilton Unwin*, Inspector of Schools, British Burma, reported his return from the leave granted to him by this Department Notification No. 124, dated 13th June 1876, and resumed charge of his duties from *Mr. Ferrars* on the afternoon of the 12th instant.

Mr. Ferrars reverted to his substantive appointment as Deputy Conservator of Forests, 3rd Grade, in British Burma, on the same date.

8.—ASSAM GAZETTE—

The 17th January 1877.—No. 95.—*Mr. A. J. Mein*, Assistant Conservator of Forests, Assam, availed himself of the

privilege leave for one month granted to him under orders of the 19th November 1876, on the forenoon of the 17th January 1877.

9.—MYSORE GAZETTE—

The 11th January 1877.—No. 358.—*Mr. I. Macpherson*, Assistant Conservator of Forests, reported his arrival at Bangalore on return from the furlough on private affairs to Europe granted to him in Government of India Notification No. 796, dated 19th August 1876, on the 14th December 1876.

The 25th January 1877.—No. 377.—*Mr. I. Macpherson*, Assistant Conservator of Forests, assumed charge of the offices of the Mysore and Hassan Forest Divisions, from *Mr. F. B. Dickinson*, Assistant Conservator, on the afternoon of the 10th January 1877.

The 26th January 1877.—No. 378.—*Mr. N. Daly*, Assistant Conservator of Forests, is granted privilege leave for 29 days, with effect from the 15th January 1877.

10.—BOMBAY GAZETTE—

The 5th October 1876.—*Mr. H. Mainwaring* acted as District Forest Officer, Colába and Dápoli, from 15th to 30th June 1876. *Mr. C. A. Morphew* has been appointed to that office from 1st July last.

The 7th November 1876.—*Mr. A. T. Shuttleworth*, Conservator of Forests, N. D., is promoted from the 4th to the 3rd Grade.

The 2nd December 1876.—*Mr. H. Mainwaring*, Assistant Conservator of Forests, was attached to the Conservator's office from 1st July to 11th September 1876, on which date he took charge of the Násik District Forest office, after office hours, from *Mr. Wroughton*.

The 9th January 1877.—*Messrs. T. B. Fry*, Assistant Conservator of Forests, 2nd Grade, and *A. K. Nairne*, C.S., Extra First Assistant Collector, in charge Panch Máháls, respectively delivered over and received charge

of the office of the District Forest Officer, Northern Circle, on the 23rd December 1876, before office hours.

The 19*th January* 1877.—*Messrs. E. J. Ebden*, Assistant Collector on Special Forest Demarcation Duty, Kanara, and *Lieutenant-Colonel W. Peyton*, Conservator of Forests, Southern Division, delivered over and assumed charge of the office of the Assistant Collector on Special Forest Demarcation Duty, Kanara, on the 11th December 1876, after office hours.

The 20*th January* 1877.—*Mr. J. L. Laird*, Assistant Conservator of Forests, in charge of the Demarcation of Forest Reserves office in Belgaum, and *Lieutenant-Colonel W. Peyton*, Conservator of Forests, S. D., delivered over and assumed charge on the 12th instant, after office hours, of said office and establishment, consisting of 1 Mapper, 1 Clerk, and 2 Peons, transferred to the Conservator for Forest Demarcation Duty in the Kanara Collectorate, as per Government Resolution No. 7396, dated the 15th December 1876.

THE

INDIAN FORESTER.

Vol. II.] APRIL, 1877. [No. 4.

A Study on the Reboisement of Denuded Slopes and the Preventative Treatment of Torrent Areas.

Being a Review of Dr. J. Croumbie Brown's "*Reboisement in France.*"*

In a literary point of view, Dr. Brown's book leaves much to be desired. With indefatigable industry he has acquired a vast mass of materials, and having divided them into four parts, like four great heaps, he presents them in bulk to the reader's mental digestion. Endless repetition of subjects, examples quoted over and over again, part of a subject dealt with in one place and the rest in another, are the natural results. If a descriptive motto for the book were required, it would be aptly found in the words "*Rudis indigestaque moles.*" Besides this, the style is discursive and the translation from the French singularly barbarous.

Take the following specimens, not necessarily the worst, selected at a cursory glance through the book :—

"One may affirm with certainty that if a remedy be not speedily applied, ere long the population will go on diminishing * * * I do not know if I deceive myself, but I believe it is possible to apply the remedy and I believe, moreover, that it is high time to set about this" (*p.* 10.)

"The torrents becoming more and more devastators of the country, in consequence of the destruction of these, will bury under their deposits extensive grounds which, &c. (*id.*)

"All the inhabitants have had was the delight to reap for some years a little barley; to-day they no longer reap anything; and they find themselves in misery" (*p.* 281.)

* London, H. S. King & Co., 1876, 1 vol.

"The flood swept away the rocks with so much greater ease that nothing had been repaired since the first storm which left the stones dug out" *(p. 92.)*

"There was seen coming down in that of Yeuse, a small fillet of clear water" *(id.)*

"But every time this shall occur, you shall refer to the Administration who will address to you timeously the instructions, &c." (*p.* 168.)

"The inhabitants of the mountain, chiefly pre-occupied with the interest of pasturage, do not welcome in general, but with a certain apprehension, any measures relating to reboisement" (*p.* 171).

"The trees may touch when they have attained the state of perches" (*p.* 252). This, I suppose, is a translation of "*perchis*" (!) Again (*p.* 151) he speaks of the young 'fellings' being out of danger—meaning, I suppose, young thickets (*taillis*)! and in another place of *gemmaze* (tapping for resin) as "budding."

"The collet of the root is buried, &c." (*p.* 251).

"This department will be deleted from the map of France" (*p.* 282).

At page 300, we read of the 'insuccess' of planting works.

Some of these specimens of English could not be surpassed even by a B.A. of the Calcutta University. Many more might be given, but these will suffice.

Having said so much I gladly turn to notice the real merits of the work and the solid benefit conferred by the author on English-speaking foresters. It is impossible, however, not to notice these defects, because they make the author difficult to follow and require no little labor on the student's part to connect the mass of facts presented to his notice into a progressive chain, leading to definite and practical conclusions.

From a sense of the value of the materials, I have endeavoured not merely to review the book, but to write a study on it, and to put together and arrange the chief materials in such a way as to render the subject intelligible. For all details in further elucidation of special points the book itself must be consulted.

To reduce the study to readable limits, I shall assume in the first place that the mischief done by the denudation of mountains is very great, even in the first stages; much more so when real torrents have been developed. I shall further take it as well established that torrents, deep ravines, and landslips, at any rate, in a majority of cases, are caused or enormously augmented by the denudation of hill-sides of their trees and other vegetable covering.

I shall omit with some regret, the detail of those interesting but terrible recitals (which read like tragedies if their reality were not only too well established) which Dr. C. Brown cites in abundance as illustrating and enabling us to realise the destructive action of torrents. The history of the Devoluy district(1) of the torrents around Embrun,(2) of Combe d'Yeuse,(3) of Vacherès,(4) of St. Marthe,(5) of the Mella,(6) of the Ardèche, (7) and the St. Antoine torrent in the Bourg d'Oisans arrondissement(8) are of this nature. Some of them shew how successful well-directed efforts of reboisement may be. The history of the extinction of the torrent of St. Marthe by reboisement will deserve special attention, among several similar instances quoted in the later parts of the book (see *p.* 257, chap. V, and especially the cases on *p.* 172).

In the present study I propose to confine myself to considering and gathering together the practical information scattered here and there through Dr. Brown's book on the following points :—

1. The nature and peculiarities of torrents and their action: other phenomena of denuded mountains, landslips, ravines, &c.

2. The question how far forest growth either of trees, bushes, or herbage and grass is effectual as a protective agency, and as a remedy for mischief already done.

3. The procedure to be practically followed in dealing with slopes to be reboised.

SEC. I.—THE NATURE OF TORRENTS AND THEIR ACTION.

Dr. Brown's remarks on this subject are derived almost

(1.) Page 1.
(2.) Page 35 and page 32.
(3.) Page 91.
(4.) Pages 42 to 249.
(5.) Pages 259 to 264.
(6.) Page 12.
(7.) Page 276.
(8.) Page 268.

entirely from Surell's well-known work on the Torrents of the High Alps.

As natural laws are the same all over the globe, the intelligent observer will find Surell's laws of torrents very instructive in studying the subject in India. Indeed there is no branch of forestry, it may be stated at the outset, in which principles learned in Europe may be more fully applied to India, than that of torrent action and its remedy. In India, indeed, the power of vegetation is very much greater than in the Alps; while the power of herbage only, to retain the soil and the ease with which the unstable banks of ravines clothe themselves with vegetation as soon as a chance is given them, are elements which make our position very favorable.

On the other hand it is not to be supposed that our tropical or sub-tropical vegetation is able to stand *anything* that man chooses to impose upon it. Even in the hills below Darjeeling the effects of denudation are very marked, not less so than in the drier portions of the N. W. Himalaya. The following graphic picture of the county near Embrun, will not be without its parallel in many of our hill districts :—

"The clear, brilliant, Alpine sky of Embrun of Gap, of Barcelonette and of Digue, which for months is without a cloud, produces droughts, interrupted only by diluvial rains like those of the tropics. The abuse of the right of pasturage and the felling of the woods have stripped the soil of all its grass and all its trees, and the scorching sun bakes it to the consistency of porphyry. When moistened by the rain, as it has neither support nor cohesion, it rolls down to the valleys, sometimes in floods resembling black, yellow, or reddish lava, sometimes in streams of pebbles, and even huge blocks of stone, which pour down with a frightful roar, and in their swift course exhibit the most convulsive movements. If you overlook from an eminence one of these landscapes, furrowed with so many ravines, it presents only images of desolation and of death. Vast deposits of flinty pebbles, many feet in thickness, which have rolled down and spread far over the plain, surround large trees, bury even their tops and rise above them, leaving to the husbandman no longer a ray of hope. One can imagine no

sadder spectacle than the deep fissures in the flanks of the mountains, which seem to have burst forth in eruption to cover the plains with their ruins. These gorges, under the influence of the sun which cracks and shivers to fragments the very rocks, and of the rain which sweeps them down, penetrate deeper and deeper into the heart of the mountain, while the beds of the torrents issuing from them are sometimes raised several feet in a single year, by the débris, so that that they reach the level of the bridges, which, of course, are then carried off. The torrent beds are recognised at a great distance, as they issue from the mountains, and they spread themselves over the low grounds in fan-shaped expansions, like a mantle of stone, sometimes ten thousand feet wide, rising high at the centre, and curving towards the circumference till their lower edges meet the plain."

But to return; M. Surell draws a primary distinction between rivers, torrential rivers and torrents, which it is important to maintain. For the definition of a river is not necessary to enter into particulars; a torrential river is a river which has some of the characters of a torrent, but not all. It is common to speak of some of our hill streams, like the upper part of the Ravi, Bias, &c., as "torrents"; but this is incorrect, their fall does not exceed six in the hundred, nor do they exhibit the peculiarities presently to be noted. A torrent may flow into a river and impart to a part of the course of the river some of its characteristics. Thus, for instance, the Haro river, or the Sohán or the Bhimbar in the N. W. Punjab, are torrential rivers, largely affected by the numerous true torrents that join them.

A true torrent has, in the first place, rarely more than a slender thread of water perennially flowing: usually it is dry, except during flood seasons. It has a fall which may be two in the hundred down to six in the hundred, but not less. It consists of three parts: (1) the funnel-shaped "basin" (*bassin de reception*); (2) the gorge or "channel" which is permanent and may be of considerable length, or of unappreciable length, as will be presently explained (*canal d'ecooulement*); (3) the fan-shaped bed of deposit, which is formed (and is ever spreading

out while the torrent continues its baneful activity) of the detritus brought down by the torrent *(lit de déjection)*. I shall speak of these three parts briefly in English as,—"torrent-basin," "torrent-channel," and "torrent-deposit." For a particularly vivid description of the torrents enabling one to realise these definitions, see page 263-4 of Dr. Brown's book.

M. Surell again classifies torrents into three kinds. And these distinctions explain further the different portions of the torrent we have been speaking of. The *first* occurs where the torrent starts from a "col" a neck, or pass at the head of a valley; here the torrent occupies the angle between the mountains forming the valley. In this case the "basin" may be every extensive, and, in fact, may be supplied by a great number of small streams and smaller torrents converging to one point, the apex of the funnel of the main torrent; here too the channel may be of some length according to the steepness of the incline before the bed of detritus at the junction with the valley is reached.

The *second* class contains those torrents which arise from an amphitheatre or hollow at the top of a mountain and flow down the line of greatest declivity: here the basin may be rather extensive, but the channel is sure to be shorter than in the first class.

The *third* class of torrents arise from a depression, hollow, or morass at some point on the flank of a mountain. These we may commonly see in the Himalayas, but in them the channel is very short or altogether wanting, for the apex of the funnel is continued almost up to the apex of the fan-shaped "deposit."

The funnel-shaped basin, in all cases in which a torrent is in activity, is perpetually enlarging as the sides fall in and ravines form, and from it is derived the mass of materials that goes to increase the spread of the deposit. The "channel" where it exists is that portion when there is no more falling in, and the torrent is restrained by strong banks. What looks like a channel at first may often prove only to be a prolonged apex of the basin, as it is always falling in and widening, and more perfectly forming the funnel shape of the "basin."

Sometimes a torrent exhausts itself. When the funnel has

fallen in and worn away till a stable angle is reached, and there is nothing more to wash away, the action becomes less violent, because only clear water can come down. And it is to be recollected that the destructive action of torrents is not merely due to a rush of water as water, but of water the laws of the flow of which are modified, and its weight, resistance, and friction enormously increased, by being in a more or less viscid state, through the quantity of soil, gravel, and stones, held in suspension. Directly, either from natural causes of exhaustion, or by some agency which prevents the washing away of more material, the water holds little or none of such substances in suspension, its violent action is reduced and it returns to the laws of fluidity. We must not wait to see torrents fully formed in all cases, but be on the constant watch to interfere *at the commencement* of the evil. A natural depression in which snow can lodge, or a landslip often give rise to torrents. First ravines are formed, then these unite, and so the funnel or "basin" of a veritable torrent is completed.

A remarkable feature has to be prominently brought to notice with regard to the torrent deposits. While a section of an ordinary stream would show a curve concave towards the sky, the lower part being water, and the higher the banks on each side, the torrent deposit is converse, and the water flows in a slight depression on the highest part of it. Directly, therefore, the water increases, it overflows and spreads out, forming innumerable streamlets all over the deposit, and continually altering its position: but the process of formation always goes on in the same way, and the tendency to form a fan-shaped convex mass is kept up by fresh additions of detritus.

I cannot devote any space to a consideration of the natural history of torrents. Much interesting matter may be gathered from Sec. II, Part I of Dr. Brown's book (*p.* 30), the effect of climate, geological formation, and so forth are there discussed. A torrent will be formed in time whenever the soil is ready to give way, and then it wants only the first start, usually given by denudation, but occasionally by a landslip or stone slip which creates a hollow in the hill side. The hygrometric condition of the air, and the fact that a moist atmosphere promotes vegetation,

makes a vast difference in the facility with which torrents are formed; for a soil in a dry air, with occasional and violent rain will be cut up with ravines, while a similar soil always in mist and subject to drizzling rain, will not.

We have not to wait until what I may call a formal or fully-developed torrent is established: we have on the contrary to begin in time, nip evil in the bud, and to arrest all sorts of ravines and cuttings, and to reclothe the barren slopes at the outset.

Directly, a hill side is denuded, the soil will begin to disappear, deep rifts or furrows will begin to form, then veritable ravines, and these will all be so many secondary torrents or feeders of a main torrent. Landslips will become common, springs will dry up, and streams which might otherwise be perennial will remain as dry and stony beds only full of thick muddy water, but rushing with destructive force during the rainy season. It is not on every soil that torrents will form, nevertheless fertile soil will be washed away, and the ground will be cut up, crevices, rifts and small ravines will form as may be seen in the Jura and at Karst in Illyria.*

To sum up shortly, we may either have regular torrents, or we may have denudation and defertilization of soil, the formation of rifts, ravines, crevices, and landslips.

Torrents are distinguished by their flowing only with occasional violence, and above all by the fact that in them the violent flow is (1) periodical, and (2) not only subject to the hydraulic laws of limpid water in motion, but to a supersession of such laws and their replacement by the laws of thickened or viscid fluid owing to the water being full of mud and gravel held in suspension, and therefore capable of producing different results as regards erosion and subsequent deposit of material.

Section II.—How far Forest Growth is Effective in preserving Soil and preventing Torrents.

It is hardly necessary to do more than point out that forest growth first breaks the violent force of the rainfall, causing a large proportion of the water to be for a time retained on

* See p. 96, "Reboisement in France."

branches, leaves, and stems; thence to be slowly discharged on to the ground, or returned to the air by evaporation. Secondly, that the product of forest growth is a mass of dead leaves, mosses, &c., of immense hygroscopicity and capable of absorbing a vast volume of water, and slowly distributing it to the sub-soil and to the roots of the trees and smaller plants, while the surplus runs off in a gentle stream and quite clear.

Vegetation also binds the soil by pushing out thousands of interlacing rootlets; and this is the reason why, if vegetation is given a good chance by the exclusion of cattle and fires, ravines and incipient landslips and stone-falls can be checked at an early stage, when the soil is still capable of affording nourishment to *some* herbage, however coarse and apparently insignificant.

The action of the vegetable growth is also to *divide* the action of the water, so as to prevent a number of streamlets readily uniting in one line of flow, and thus bringing a combined force and volume to bear on the excavation of a channel or ravine.

I may further confirm these views by a quotation from one of the authors noted by Dr. Brown. I refer to C. DE BASTELICA:—

"If we could expose by a vertical section, a wooded slope, it would show in the upper portion a layer of varying thickness, but most frequently of from 30 to 40 centimetres (12 or 15 inches) of *humus* in which the fibrous rootlets are so developed that the whole has the appearance of a woolly material. This layer is at once a sponge and a filter. The large roots of the trees penetrate more or less into the subjacent rock.

"When the rain falls on ground covered with wood, a considerable portion of the water is restored to the atmosphere by evaporation; another portion is absorbed by the immense expansion of foliage and boughs. If the rain be prolonged, the water comes at length to the ground, which again is capable of absorbing an immense quantity. A flow from this is slow to establish itself; it is necessary first that the saturation of the sponge-like layer be complete; and when this is effected, when the water has been able to make a passage

for itself by an infinite number of imperceptible channels, the flow like that of a charged syphon maintains a certain uniformity of flow, and this it continues for a long time after the rain has ceased.

"So much is this the case that opponents have alleged that forests are more hurtful than beneficial, as they tend to prolong floods. The flood is prolonged it is true, but the delivery is regulated, diminished at the commencement, and increased at the close: the total quantity of water drained away takes a longer time to flow; it flows during the whole of that longer time; and what is of more importance, it flows uniformly and equally, with no sudden variations, and thereby much evil is avoided; and, what is of more importance still, the forest acts at the same time as a filter, delivers no water, but what is of perfect fluidity, scarcely even discoloured by the washing away of organic matter, and unable to wash away the earth of the sub-soil protected against erosion by its thick covering of *humus*.

"When, on the contrary, the rain falls on a soil stripped of vegetation, it tends to cut this up into ravines, and it does so if the tenacity and resistance of the ground be not sufficient to withstand it; and the flood is subject to great variations in its current, carrying off here and there the earth and other *débris* of the soil.

"Forests have then a double action; on the one hand they consolidate the soil, on the other hand they reduce and regulate the flow of the current, acting at once both on the delivery and on the perturbation,—in other words, on the primary cause and on the secondary causes of the overflowing of water-courses."*

We must be careful, however, not to push the argument from the value of vegetation too far, and thus lead those persons who are still inclined to dispute the whole question, to reproach us with an exaggerated confidence in natural agencies. It is perfectly true that there are cases of landslips, and falls of rock masses which no forest growth can prevent. It is

* R in F, p 110.

also true that the very power of retaining water may, in some cases, increase the weight of a bed of mobile soil, resting on a highly inclined solid stratum of rock and so promote its fall. This is especially the case when a road cutting on some part of a steep hill side has truncated the slope, and thus given the mass above an open way to slip down.*

But the cases in which forest by absorbing moisture causes this evil can only occur exceptionally where there is a peculiar combination of natural circumstances. And it is certain that for every case where they do combine, and a landslip results, there are hundreds in which the preservation of the forest has saved the whole hill side from destruction by erosion and ravining. Moreover, in cases where the evil spoken of is threatened, it is often possible to foresee and prevent the slip by proper draining. But, under any circumstances, the fact that failures may occur should not debar us from the only known efficacious remedy. We do not (as was remarked once before in this journal) refuse to call in medical aid, because doctors occasionally fail to cure diseases. Moreover, it is to be recollected, that when landslips occur in exceptional cases, they do not repeat themselves, whereas in other normal cases, the evil goes on extending, from one ravine† to many, from the little gutter that first trickles and runs over the hill-side, to the roaring cataract, whose eroded sides continually fall in.

One other point may be noticed in connection will this subject, and that is this one which Engineers should take to heart. The value of vegetation in *aiding* engineering works is quite beyond dispute.

At Simla some of the worst cases of ravining (*e. g.* the great ravine beyond the "Lakri Bazar)" have been met by making a channel for the water of boards: but the consolidation of the sides of the hill, and the fixing of the water channels, so as to prevent the costly necessity of renewing the woodwork, could be completely secured by at once staking the soil

* See p. 248. R. in F. where some striking examples are given.

† It may be safely left to any one who will take stock of actual facts to compare the cases of damage to our valuable hill-roads, which result from landslips *arising* from too great loading of the soil with moisture from trees (not merely those arising from cuttings in soil which has no cohesion), and those which are caused by ever widening ravines cut out in the denuded hill-side.

and planting with willow cuttings, poplar seedlings, and horse chestnuts, after which, if only for ornament sake, a sprinkling of deodar transplants should be put out. All classes of French authors support this principle. Nor is it difficult to understand, for it mainly rests on this fact that, while masonry structures, dikes and embankments, can only direct and restrain the force of floods, vegetation strikes at the root of the matter and diminishes the force itself. Engineering works are always more costly than works to restore vegetation. Moreover, they are at any moment liable to be destroyed should the force of the torrent exceed the maximum power of resistance allowed for. And experience tells us that, make what, allowance we will, it constantly happens that a flood tops the highest mark; and though it may afford consolation to our minds that such a flood had "never been witnessed by the oldest inhabitant," it affords none to our pockets.

It may here be noted that, not only has practice demonstrated, but by far the greater weight of authority allows that engineering works alone will not suffice. Dr. Brown quotes a memoir by a French engineer LADOUCETTE, with the comment of SURELL to the following effect:—

"The scheme* proposed resolves itself (he says) simply into digging for the torrent a straight canal through the centre of the deposit, and maintaining this canal by constant clearings. According to M. Ladoucette whatever may be the precautions proposed by the author for strengthening the hills by means of plantations and cuttings like continuous dykes, they will never present sufficient resistance to erosion; still less will they hold out against the undermining effects of the flood."

It is mentioned by M. Surell that the clearing out of torrents is always a difficult operation, on account of the great size of the stones and the hardness of the mud in which they are imbedded; and that this work which demands great waste of muscle, and entails great expense, produces no durable result. The smallest flood suffices to overturn all, and to throw the bed of deposit into its previous disorder. This scheme attributes all the ravages

* R. in F. p. 77.

of torrents to the irregularity of their beds; and proposes as a simple and sufficient remedy to give to them a straight bed. Surell alleges that the scheme confounds cause and effect; and that torrents do not spread themselves hither and thither because they have not a straight bed; but they have not a straight bed because, continually depositing matter, they are forced to spread themselves hither and thither.

When M. LADOUCETTE himself tried to work on the Durance near Embrun, by making an enbankment on his principle it was found that the first heavy flood destroyed all his work. It is quite true that *while* plenty works are going on and the young forest acquiring a stature sufficient to enable it to regulate the water discharge, it is necessary to protect the banks of torrents and rivers by '*barrages*,' embankments, &c., but these are only *aids*, while the power of the forest is developing. It is the forest that creates the force by stopping the flow of water at the outset. Works on the banks do nothing to affect this: and consequently they must either be so massive and costly as to resist any possible force or else are perpetually liable to fail directly an unusual flood occurs which is just the very time when they are most required.

And thus M. Culmann's observations which follow are entirely correct. In 1856, when an unusual rainfall occurred, M. Culmann was deputed to examine and report on the torrents throughout Switzerland. He says:—"In Switzerland as elsewhere, the evil produced by torrents is not a necessary evil: it takes birth often from the waste and recklessness of the inhabitants. The principal remedy, and the only one which is decisive and definite, is the *boisement* or *gazonnement* which stifles the evil at its source. In regard to such (engineering) works the theory of M. Culmann says M. Cezanne, may thus be stated: *Barrages* are but a temporary expedient to be employed while awaiting *reboisement*: it is necessary to construct them in a series, commencing from below:-when the first barrier is filled to the level with gravel, there should be constructed a second behind it, and so on continuously.*

* R. in F. p. 842-85.

Lastly, I wish to quote the remarks of M. GENTIL, Engineer-in-Chief:—

"Embankments attempted on the *cones de dejection* at the issue of the gorges by which come down the materials carried off by the waters from the higher-lying lands, have always failed, or at best the effects produced by them have been but precarious. The dikes in a few years have disappeared under the rubbish from the mountain.

"But the Forest Administration has succeeded, by the consolidation of the soil, in the creation of a robust vegetation on the flanks of the *bassins de reception*. The results are assured: the case of the works at La Batie, at Sainte Marthe, at Resail, has demonstrated most manifestly and most indisputably, that it is quite possible not only to arrest *dejections*, but also to re-establish vegetation on mountains, the most ravaged by these torrents.

"From the time that the soil in the *bassin de reception* is consolidated, and by plantings and sowings and works of the Forest Administration the soil is fixed, material is no longer torn away and thrown into the current which transports it to the lower-lying parts.* The waters assume in some measure a regular *règime*, they come clear and free from mud upon the *cones de dejection*, they dig out there a stable bed for themselves by carrying away the less ponderous material; at this stage embankment becomes possible in the valley, and it is practicable at little expense to keep in one unchanging direction the flow of waters which no longer carry away the stones. Properties along the banks are then securely protected; they are no more exposed to a sudden disaster such as those of which we have so many examples; they recover with this security their money value; and the population re-assured may count upon their harvests.

"On the other hand, the fixing of the bed of the current permits the erection of bridges and aqueducts on the roads and highways; communication is protected against the frequent interruptions to which it was exposed when the torrent was in full activity; and, in fine—nor is this the least important result of the regeneration of the basin of reception—the principal rivers no

* I can only quote Dr. Brown's English as I find it in his book.

longer receive the masses of *dejection* which encumber their beds and create confusion in times of flood. In illustration of these results, which have been thus referred to in a general and summary way, may be cited the following facts :—

'The torrent of Sainte-Marthe, near Embrun, was threatening to extend its *dejections*, so as to cover the Imperial road No. 94. A proposal to construct a dyke on the left bank had been formally discussed; the expense of this was estimated at about 45,000 francs, and was considered that it should be met in part by the State, and in part by the proprietors on the river bank. But since the execution of the works of *reboisement*, in the basin of Sainte-Marthe, by the Forest Administration, this water-course has lost its torrential character, and has settled its bed in the *cone de dejection*, the embankment has become useless, and the project which had been under discussion has been entirely abandoned.

'The torrent of Riou-Bourdoux was noted as one of the formidable torrents of the High Alps; the quantity of material which the waters put in movement at every flood, had, in some measure, led to the abandonment of the construction of a bridge for the passage of the Imperial road No. 94; the Forest Administration has enclosed (*mis en defens*,) the basin of reception, and executed some works of consolidation and of *gazonnement*. The *regime* of the torrent has been in consequence so far changed, that, at little expense, the bed on the cone can be definitively settled, and a bridge erected for the Imperial road.

'I might bring forward other examples of what has been effected; those which have been given may suffice to make appreciable how complete and efficient are the results obtained.'"

Thus, there is a general consensus of opinion that engineering works alone are insufficient under this heading. I may conveniently (but it must be briefly) dispose of the question, what sort of re-clothing of vegetation is the best? The forest writers use three terms: *Reboisement* (which we have adopted in an anglicized form) means re-stocking with trees; *Buissonnement* means re-stocking with bushes; *Gazonnement* means

laying down turf;—not only grass, but a mixture of grass and all kinds of herbaceous plants. All are valuable in their way; and as regards the question between tree growth and bush growth it is obvious that the latter must be productive of the same results as the former, only in a less degree; also that the utility of bushes is as a rule less than that of trees. With turfing or *gazonnement* the case is different: an element of another nature comes into play. Planting works interfere with grazing, but putting down turf does not: hence people began loudly to exclaim that it was waste of money and an unnecessary infliction on the pastoral districts to plant trees—turf would do all that was required. That turf alone can be employed in regions *above* forest vegetation is obvious: that it is far better than nothing in all cases, is also true; that it is efficient in *some* cases is also not to be denied: the French laws consequently promote for *both* methods of clothing the mountain side.

M. MARSCHAND (quoted by Dr. Brown) has the following observations on the subject* :—

"Many people suppose that on the steep parts of the Alps a good *gazonnement* would be enough to keep up the soil and put an end to torrents. Experience has shown me that *gazonnement* above is nearly always powerless to moderate sufficiently the action of water flowing over steep declivities.

"I have been surprised at storms when passing through meadows fit for being mowed, situated at 2,200-metres altitude, that is to say, above the forest region. After some minutes if the storm was pretty violent, the water ran off the turf, collecting in the depressions of the ground, and forming small clear torrents. On the 17th August 1869, in particular, I observed in the upper basin of the Tinee, in the Maritime Alps, a storm of wind and hail which hardly lasted half an-hour, but which gave rise in the meadows to a number of these little torrents, the junction of which would produce a very considerable rise in the Tinee.

"A storm, observed at the same point in October 1868, threw immense masses of water into the same river in spite

* R. in F. p. 99. See also the remarks of the Administration at p. 174.

of the perfect *gazonnement* of its upper basin; the same storm caused great havoc in the upper basin of the valley of Abries, among the pastures on the hill of Grange Commune. Two of my friends had great difficulty in crossing the meadows situated near the summit, so large were the torrents which had suddenly formed.

"All places mentioned are covered with very good turf, and the soil is formed of grey schist.

"It would be interesting and useful to ascertain the quantity of water which, falling with the rapidity of a thunder-shower, would be sufficient to saturate a turfed surface, but the quantity is very small, and depends on the steepness of the descent. This phenomenon is easily explained. Alpine turf, beaten down by cattle, is formed of small plants growing close together, the interlaced roots forming a sort of felt. When rain comes, it makes the rootlets swell, which, pressed together, imprison the soil and form a scarcely permeable covering, through which the water gradually passes only by means of capillarity and hydroscopicity. If the rain is slow and continuous, these two properties are enough to permit all the water to pass through. If on the contrary it is violent, the water runs over the surface without being absorbed.

"But, supposing the surface to be horizontal, the effect just described is also produced; the excess of fallen rain, however, lies on the herbage to be gradually absorbed, for the quantity of rain retained by the herbage is in inverse proportion to the slope of the ground, and varies continually.

"Turf, from the special point of view which we occupy, is chiefly useful in consolidating the soil; this end is partially attained, in so far as any surface whatever, when turfed, will always resist the direct action of the rain, but as a whole, it is not: the excess of the water absorbed unites, forms little streamlets, and according as the inequalities of the ground on which they occur are steep or narrow, the turf is attacked by the running water, the soil is laid bare at some one point, and, in a few minutes, there is the beginning of a ravine, which will always grow larger after every new storm if a remedy be not promptly applied."

In India, owing to our more luxuriant growth, it may generally be allowed that both scrub growth and herbage are wonderfully efficacious, but grasses vary very much in power; some species, especially those of lower elevations, having the habit of growing in tufts or crowns, with bare soil beneath, and these are very inferior as a protection, because the water action sets in between the tufts.

In France, I should say in conclusion, the result has been that the law of 1860 for *reboisement* has been supplemented by the law of 8th June 1864 for *gazonnement*. This law provides that in each case it is to be considered whether the land need be turfed, or partly turfed and partly planted, or wholly planted.

SECTION III.—THE PROCEDURE TO BE FOLLOWED IN DEALING WITH LOCALITIES TO BE REBOISED.

The French law has various provisions for different classes of property, by which it seeks to induce private and corporate proprietors to undertake planting works. In this country at present we may practically dismiss these differences, and consider that in all cases reboisement works will have to be undertaken by State Agency.

In dealing with the subject, I shall consider the general plan of reboisement followed, whether we are dealing with a country actually cut up and ravaged by torrents, or with one which may be so threatened, and on which landslips and ravines have already made their appearance, or where the hill side shows a tendency to slip away and discharge masses of stones and earth.

The *first step* in any reboisement work is *to get complete control over the area to be treated.* This is a *sine quâ non* in all cases, whether we are trying to extinguish a torrent, or to reboise dry hills or any other work of the class. Having defined the limits of this area, clear out all grazing from such portion as you begin with, and stop the exercise of all rights whatever. The object is to encourage every blade of grass, every herb and root that can be got to sprout a little, to do its best to cover the ground and gradually to form, with its decaying

leaves, a little mould to support the better forms of vegetation that should follow.

Without this preliminary, no attempt can ever possibly succeed.*

On the value of vegetation I cannot forbear reproducing an extract from Marsh quoted by Dr. Brown.†

"Whenever a tract of country, once inhabited and cultivated by man," says Marsh, "is abandoned by him and by domestic animals, and surrendered to the undisturbed influences of spontaneous nature, its soil, sooner or later, clothes itself with herbaceous and arborescent plants, and, at no long interval, with a dense forest growth. Indeed, upon surfaces of certain stability, and not absolutely precipitous inclination the special conditions required for the spontaneous propagation of trees may all be negatively expressed and reduced to these three: Exemption from defect or excess of moisture from perpetual frost, and from the depredations of man and browsing quadrupeds. Where these requisites are secured, the hardest rock is as certain to be overgrown with wood as the most fertile plain; though, for obvious reasons, the process is slower in the former than in the latter case. Lichens and mosses first prepare the way for a more highly organized vegetation. They retain the moisture of rains and dews, and bring it to act in combination with the gasses evolved by their organic processes, in decomposing the surface of the rocks they cover; they arrest and confine the dust which the wind scatters over them, and their final decay adds new material to the soil already half formed beneath and upon them. A very thin stratum of mould is sufficient for the germination of seeds of the hardy evergreens and birches, the roots of which are often found in immediate contact with the rock, supplying their trees with nourishment from a soil deepened and enriched by the decomposition of their own foliage, or sending out long rootlets into the surrounding earth in search of juices to feed them."

* See this enforced in the French Government Circular of 1st June 1861. (R. in F. p. 166.

† R. in F. p. 325.

Connected with the subject of allowing the natural recovery of vegetation as a first step, it would be proper to study the question of *preventing* denudation in the first instance. I have made some remarks on this subject in a note on "Demarcation of Hill Forests" in this Magazine for January 1877.

I will only here refer the reader to page 57 of Dr. Brown's book.

It is laid down as a principle that the *total clearing* of a hillside can never be allowed where the slope is steeper than one in three; or which has three feet of base for every one foot in vertical height. That even this clearing should be so effected as to leave horizontal belts of uncleared land between, at least 30 feet broad, and more than this according as the slope is steeper and the chance of ravines forming, greater.

The area once protected, it is not desired to attempt tree growth all at once. Where the soil is very bad and bare, it is a legitimate part of the operation of reboisement, to sow weeds and anything that will grow. Lucerne has been sown with remarkable success. This is deserving of attention as the crop may be cut without uprooting, and the fodder may be sold or given to neighbours who are deprived of grazing by the reboisement operations.*

The extent of the area to be so operated on, of course, depends on what our object is; if it is to reboise a mountain slope that has been denuded, the area will indicate itself to the simplest observation. Supposing, however, we wish to control the action of a torrent which debouching into the plains, threatens great damage to a town or to the public roads and bridges. We have first to examine and enter on a map all the ultimate ramifications and sources of the torrent, and see which contribute most actively to the flood during the rains; and having noted the character of each and made remarks as to soil, &c., the line which takes in the whole of the sources, will represent the area to be dealt with.

The object is to determine the exact site of the source of mischief.

"By subjecting every one of the affluents to such an ex-

* R in F. 204 and 251.

amination, and following out this in all the upper ramifications of the river, it is easy to determine what are the main centres of the production of the stone or clay materials borne along by the river, which are the causes of the perturbation which has to be fought. By this procedure the evil is localised, determined, and circumscribed; and it is often astonishing to find how limited in extent, compared with the area of the basin, are the whole sources whence the gravel is obtained."*

The following extract, which is taken by Dr. Brown from Surell's Treatise well describes this part of the procedure :—

After insisting on the necessity, which I have already pointed out, for either stopping grazing, or restricting the number of the flocks and herds to what the reproductive vegetable power of the district can sustain, he recommends that the land to be defended against the ravages of the torrent should be marked out, by tracing, on each bank of the torrent, a continuous line, following all the windings of its course from the highest point of its commencement to its issue from the gorge. "The strip of land comprised between each of these lines, and the summit of the mountains, would constitute (says he) what I would call a *zone de defense,* enclosed against flocks and herds. The zones of the two banks, following the outline of the basin, would meet in the heights, and would begird the torrent like a girdle. The breadth varying with the slope and with the consistency of the soil, would be about 40 metres or 130 feet below ; but it would increase rapidly as the zone rose on the mountain side, and it would end in embracing a space of 400 or 500 metres, or from a quarter to a third of a mile.

"This outline would require to follow, not only the principal branch of the torrent, but also the different secondary torrents which degorge into the first ; following then the ravines which each of the secondary torrents receives, and going on thus from branch to branch, it would go on to the birthplace of the last threadlet of water. In this way the torrent would find itself begirt throughout the most minute of its ramifications. These

* R. in F., p. 124.

zones of defence, in penetrating the *bassin de réception,* will be enlarged; while on the other hand, as the ramifications are in this part more multiplied and more approximated, it will come to pass that neighbouring zones will join and even overlap each other, and their outlines will be lost in a common reign, which will cover the whole of this part of the mountain, without leaving there a void space. The zones of inclosure being thus determined, the first part of the operation is finished. But this is in some respects only the outline of the periphery of the work which is to be done.

"We have next to do with what may be the most active and prompt means of drawing vegetation over the whole surface of this enclosure. For this purpose it should be sown and planted with trees; where it may be impossible to raise trees at once, the growth of shrubs, bushes and thorns should be stimulated; but on the height where the zones include the whole extent of the *bassin de réception,* it is a forest which must be created. The best adapted kind of trees must be selected; recourse must be had to all modes of procedure, indeed even to modes of procedure which have yet to be discovered, and which go beyond experience. The work must be done any way and every way, and the end aimed at in these works ought to be to cover the *bassin de réception* by a forest which will every day become more dense, and which, extending itself step by step, will end in spreading even into the most hidden depths of the mountain.

Thus, then, it is in the highest parts that the works should be first undertaken, thence to be extended to the parts on a lower level. Not only should a commencement be made by planting the *bassin de reception* before giving attention to the lower zones, but even in this basin the commencement should be made in its highest ramifications. We should go above the last traces of the bed, up to the abrupt slopes furrowed with ravines which the water forms and deforms with each storm of rain; it is there that the first works should be established: we should afterwards—but only afterwards—carry them lower, but making sure first that the parts left are quite consolidated."

It may here be mentioned that where the conversion of the

whole area into close forest would affect the grazing of a district and put the people to great straights, it is a good plan to cover the ground partly with grass and herbage and partly with trees.

It is usual in such cases to cover the ground with grass and to establish at intervals strips or interrupted bands of trees, so as to allow the circulation of the cattle. Broad-leaved trees worked for coppice on a short rotation are recommended.* Compensation should be paid where necessary to reconcile the people with the temporary interference with grazing.

Generally speaking, the ground we have to operate on will be found to be unstable, easily washed away, liable to landships, &c., or will be cut up into a thousand fantastic shapes by rain water, as those who have seen the Pabbi hills or the *rakhs* in the Jhelum district of the Punjab will readily recollect. We have, therefore, to level these irregularities, at least to bring down unstable elevations, fill up intervening depressions and convert all chasms with ravines, rifts and prominences into general connected curves. Sometimes blasting will be necessary, but in the majority of cases, the spade and the pickaxe, for digging and levelling and throwing debris into hollows, will suffice.

Then we have to protect our levellings from being again cut up by the next violent fall of rain. This is done partly by staking, and partly by fascines. Staking may, in the hills, be extremely well done with large cuttings put in the loose bank in rows, such stakes to be of willow or some other species that will take root; or they may be dried stakes held together when necessary by a wattling of flexible branches, or may be hurdles put in at intervals. Experience will prove which are best adapted to the particular circumstances of the case.

When a stronger defence is required, what are called "barrages" will be useful. These are either made of fascines or of stone. The former are generally used when there is a smaller flood to restrain, or a smaller ravine to fill up.

Stone barrages are useful to force the water of a torrent to

---

* R. in F., p. 315.

spread itself out in a shallow sheet. Such weirs are constructed in a series one above the other, beginning at the bottom.

The best form would appear to be that of a submergible weir, a horizontal sill strong enough to resist water wear which will force the waters to spread themselves out in a sheet, in doing which they lose their velocity and are forced to deposit above the weir, the material which they were carrying along.

But "barrages" are, as we have seen only useful to aid the work of vegetation, not to supersede it. In other words, it is idle to hope that without enclosing any area or giving vegetation a chance of spreading, we can restrain the action of torrents. I of course admit that light barrages, composed of hurdles, stakes and fascines, may be properly employed in the first stages of the work, to fill up hollows, small ravines and to consolidate unstable banks, but "barrages" erected across the course of the torrent itself are of no use till all works for clothing the soil with vegetation are well on foot.

The following extract correctly states the case:—

"These barricades will be like the completement of the works of extinction; they will serve to defend certain banks, till the vegetation has reclothed them over all their extent, and till the torrent itself shall have lost the greater part of its violence. They can be employed also to stop up the secondary ravines to intercept the little ramifications, to fill up small holes; in fine, to lead over the surface of the soil, and thus completly efface, those innumerable streamlets divided like the hair-like fibres of a root, which are really and indeed the root of the evil."

When dealing with banks cut up by water channels, one of the first things to do is to utilise the water to moisten the soil, and thus promote vegetation. This is done by taking off from the channel a great many little canals on either side, running at very gentle angles (otherwise there will be a dangerous rush of water in them). The earth thrown up out of the channels will be loose and moistened by the flow, and on it young plants may be put out or seeds sown, as the case may be. The extract continues:—

"By the same analogy it may be understood that the vegetation advancing always, and gaining each day upon the

ground, should descend on the banks and carpet them almost to the bottom of the bed, as has happened in many torrents; but the giving of permanence to the banks is a result of too great importance to be left thus to the caprices of the soil, and of the free will of nature. We come thus to a third department of the work. It is one in which it is especially necessary to redouble care and to multiply devices.

"To draw the vegetation over the banks they should be cut with small canals of irrigation derived from the torrent. These will impregnate with fertilizing humidity the land now rent and dry; they will break also the slope of the declivities, and serve to render them more stable, and soon they will disappear under the tufts of various plants brought to light by the water.

"The formation of these canals being extended ultimately to the summit of the bank, the water will thence penetrate the zones of enclosure and fertilise their soil. It is in the retention of the water, and in the possibility of opening everywhere and multiplying almost indefinitely provision for this, that rests in reality the whole future of the work.

A system of soil protection is described by Dr. Brown as inaugurated by a forest-guard named Jourdan, which deserves notice.

The system consists in applying fascines wherever there is a ravine forming, and the barriers of fascines are to be nearer to one another in proportion as the declivity is steeper and soil more friable.

A first bed of fascines is laid across the ravine; on this another set is piled, longwise, *i.e.* the points looking towards the summit of the hill. Then more transverse fascines follow, to such height as the locality may require, the lower fascines are held in their place by huge stones.

In dealing with slopes very unstable in character, it is reasonable, both to plant and to sow herbs at the same time.

In the first place, beds are prepared some 6 or 7 feet broad, not quite level, but slightly sloping inward, towards the mountain, so as to retain all the water possible; on these they plant young trees of 3 or 4 years' growth so close that the branches meet; they are planted very deep as a security against drought, and the

stems on being put in are cut down close to the ground. This pruning down is several times repeated. It has the effect of causing the roots to spread and become powerful, owing to the check of the upper growth.

According to slope, those beds may be made at a greater or less distance apart: the steeper the slope the less the distance. The space between is sown after ploughing or hoeing, with forage plants, and all manner of herbs. Lucerne has already been specially recommended, as its upper growth can be cut and sold or given to those whom the exclusion of grazing has affected, and the wide-spreading roots are invaluable in consolidating the soil.

In the case of very steep banks, hurdles and rows of stakes may be employed to retain the soil more effectually.

The beds alluded to must be well dug up, for 16 or 20 inches deep, and stones picked out where possible. It may be desirable to set hurdles against the bank along the inner edge of the bed, to prevent stones, &c., slipping down from above and crushing or covering the young plants.

In sowing forage and other seeds between the rows of young trees, a great variety should be introduced.*

Sowing broadcast on unprepared soil is rarely, if ever, successful.†

When the soil is very bad, hard and dry, the use of "potets" or prepared holes for planting is recommended.‡ The "potets" are 40 inches square and dug to 18—20 inches deep; they may be 6 or 7 feet apart or less; all stones are picked out and whatever good soil can be gathered in the vicinity is put in. Sowing or planting these potets can only be determined by the experience of the locality. Plants that develop long tap roots are to be preferred.

Nothing could be more hopeless in the way of work of this kind than the reboisement of Mont Faron behind Toulon, a detailed account of which was read to the Conference at Allahabad in 1873 (*vide* Vol. of proceedings, page 162).

If a further example is needed it may be found in the account

---

* R. in F. p 271.
† R in F. p. 273.
‡ R. in F. p. 284.

of reboising the Luberon which is a Crown Forest (Dep. des H. Alpes). It is situated on 'Neocomian' belonging, according to Dr. Brown, to the lower chalk formation; the land is mostly bare, covered with heaps of rock, burned by the sun, and totally devoid of vegetable mould. Here they gathered together the little soil they could find into ridges and prevented it from falling down by layers of stones. Sowings were then effected on the ridges. "To one who has seen the sowings of the Luberon," says the Official Report of 1863, "no reboisement will appear impossible.

It may here be noted that in dealing with all difficult localities, good and well watched and recorded experiments must first be made, in all sorts of different places, by different methods and with different species. But full record and care are absolutely necessary. It is *not* an experiment to waste money, by doing what *primâ facie* is absurd, and making no note either of the steps taken, their cost, or their results.

I may here mention that for all works of this kind it is necessary to have well supervised and accessible nurseries, from which young plants can be obtained without exposing them to carriage for a long distance. Nurseries may be sheltered by frames covered with grass thatch.

It is also desirable to have a seed-house and a system of collecting seed, so as not to be in want of seed at the very moment when everything ought to be ready for sowing.

Short notes about planting may also be here given. One very good plan is "tuft-planting" (*pourette*). The earth raised is divided into clods, each containing several young plants, a fragment containing 2 or 3 plants broken off and planted out; one or more is almost sure to grow.*

In our hills where oaks are sown, it may be well to try a plan recommended, *viz:* to cause the acorn to germinate artificially during winter, to cut off the radicle, and sow the mutilated acorn in a seed bed. This favors the development of fibrous roots and checks the development of the tap root. This is of course not desirable, where a long tap

* R. in F. p. 193.

root is needed in arid soil, but where it is desired that the tree should take a quick hold on the soil.

In removing plants it is also found very useful to dip the loose roots into liquid clay before transport. Before putting out the transported plants into the places, it is said greatly to stimulate their vegetative power if the roots are soaked for several hours in urine.

As to the selection of locality for reboisement, it is to be recollected that where grazing can be with difficulty kept out for ever, it is not necessary to convert the whole "perimetre" into forest, it may be treated *partly* by "gazonnement"; and partly by trees in alternate strips and belts, the latter being not continuous, so as to allow of circulation of cattle when the place is reopened to grazing, the trees being out of danger.

Above all things always commence the work where the chance of success is good, and where *results will be seen.* This will disarm popular objection and make the authorities also favorable. The sight of a bare place actually restored, does more than pages of argument. This was impressed on the Forest agents by the French Administration in carrying out the laws of reboisement.

The Administration directed that a good selection of ground for the first experiment should be made so as to "arrest the eye and convince the indifferent and the incredulous."*

For a general account of the progress of a work of reboisement I would invite the reader to study the account of the treatment of the Bourg D'Oisans given by Dr. Brown at page 270. And I shall conclude this paper by an extract describing the successful extinction of the St. Marthe torrent (already alluded to).

The torrent of St. Marthe is situated on the right bank of the Durance, and rises in Mt. Saint-Guillaume (nearly 8,350 feet above the sea level). Its course extends over about five miles to the point where it joins the river a little more than a mile below Embrun, and where the elevation is only 2,350 feet. In five

* Nos. R. in F. pp. 171-2.

miles therefore the torrent has a fall of 6,000 feet or above 1 in 5.

When the works were commenced on the *bassin dé reception* the surface of it was absolutely bare, and everywhere cut up by ravines. But as the upper part is formed of sandstone and of pretty hard compact lime stone, the disintegration was only superficial.

The *canal d'écoulement* is a narrow gorge, and has an extremely steep descent, all along which exist *berges vives* in a tumbling down condition. The upper half is formed of earth, stones, and blocks of rock which have been borne thither; the lower half traverses black marl almost in a state of clay or mud.

Everything necessary to produce the well-known effects of torrents is found in this torrent. The *bassin dé reception*, entirely denuded of vegetation, forms a funnel in which the waters, at the time of storms of rain, rush to a common centre almost instantaneously. The mass of waters precipitates itself on the steep declivities of the *thalweg* (line of water discharge,) from the very first, tearing away from the flanks of the upper hills large quantities of stones and rocks of all sizes. Lower down the flood takes up the black mud furnished by the washing away of the lower lying hills; and then, like an avalanche, which in some respects it resembles, it precipitates itself with a violence which nothing can resist, and debouches at the bottom of the valley at the extremity of the gorge which forms the summit of the *cave de dejection*. Fine properties in the environs of Embrun, of the value of at least 300,000 francs, an imperial road, with a bridge and dyke belonging to the State, of the value of more than 200,000 francs, and a district road of great importance, were all being threatened with destruction. Dykes had been constructed along the side of the torrent to protect the plain; but the bed of the torrent rose higher and higher still. It had been necessary to meet this by raising higher and higher the embankment, and it had now come to pass that the torrent was several metres above the level of the property along the banks. Although it was imprudent to raise the torrent still higher, a new scheme of embankment,

which it was estimated would cost 45,000 francs, had been formally discussed, and it was about to be carried out.

It was under such conditions that the torrent was attacked in 1865. From 1863 the whole of the basin, which measures 530 hectares, upwards of 1,200 acres had been enclosed (*mise en défens*,) with the consent of the Municipal Council of Embrun, though it had been opposed by the inhabitants of the hamlets on the sides of the torrents. These had in reality the greatest interest of all in the execution of the works. As their dwellings and their fields, drawn along with the general movement of the soil, were tending towards engulfment in the torrent.

The works began with an improvement of the basin. Two years of enclosure had prepared the ground. All the ravines were cut up into portions by more than 200 *barrages*; channels to lead off and disperse the water were cut; and seeds of forage plants were sown over places which required them.

Attention was then given to the consolidation of the hills bordering the *canal d'écoulement*. With this view there were constructed first, strong *barrages* in the high lying parts of these hills. The years 1865, 1866, and 1867 were employed in securing the command of the head of the torrent, and diminishing the violence of the flood. It would have been imprudent and almost impossible to construct *barrages* in the middle of the black slime of the lower-lying portion of the canal *d'écoulement*, inasmuch as the force of the flood would not have been sufficiently reduced at that time.

In 1868, it was considered that the last part of the work might be taken up with some chance of success. If matters had been less pressing this might have been deferred for one or two years more; but it was deemed of importance that the results should be made apparent.

In constructing the lower series of *barrages*, the work was begun anew from below, instead of being continued from above. First there were planted at the lower extremity strong *barrages* capable of withstanding the strongest floods. Others were then constructed successfully further up the torrent, and pretty near to each other, that each might give support to the one above it.

And in portion, as land was gained by each *barrage*, the hills were cut into shape by the pickaxe to give them the angle of stability.

In the same time that the principal water-course was thus being consolidated, *boisement* and *gazonnement* were carried out on the lateral slopes. The ravines were choked with small *barrages* of stones, with hurdles, and with *fascines;* and the ground was drained at spots where infiltrations of water were producing subterranean disintegration.

These works, carried on in combination with each other, have proved completely successful. The torrent is now (1870) extinguished. For two years the greatest storms of rain have deluged the basin, but have had no other effect than to occasion a moderate increase of the flow. This has carried off no material, nor has the stream overflowed its banks. All danger to the plain has disappeared.

The Syndicate has dissolved itself.

The new scheme of embankment has been abandoned. The proprietors have again brought under culture all the lands previously invaded, and a few years ago they planted vines and orchards within the very embankments of the torrent. These facts are patent to all; and they have been officially certified by the *Service des Ponts et Chaussées.*

The expenditure, including that of 1868, has been 91,134 francs 24 centimes. The number of *barrages* constructed is 759. The total length of the *barrages vivants* and the hurdles is 32,270 metres. The length of roads, 9,400 metres. The length of channels to carry off and disperse the water, 1,117 metres. The extent of ground regenerated and restored is 400 hectares. The extent of what may be considered as regained and maintained is 300 hectares.

B. H. Baden-Powell, F.R.S.E.

Fungoid Diseases of Forest Trees.

By M. C. Cooke, M.A., L.L.D., &c.

It has long been admitted that parasitic fungi do exert an influence which is deleterious to growing plants. This has in recent years been so fully confirmed in such well-known instances as the potato disease, hop mildew, corn mildew, smut and bunt, that it is no longer necessary to adduce arguments in its support. Whether such influences are in a like manner injurious to hard wooded plants, such as shrubs and forest trees, is perhaps not so well established or so universally accepted. Nevertheless, that fungi are injurious even to forest trees, has been recognized in some European countries by the attention devoted to the subject in the State Departments, and Schools of Forestry, more or less under the control of the State. Undoubtedly we know less of the diseases of trees than of herbaceous plants, because they have been studied less, but there can be no doubt that parasitic fungi are injurious even to forest trees, and that the study of such a subject is worthy of the attention of Forest Officers in India as elsewhere. For these considerations we have consented to communicate to this journal a few suggestions to serve as aids to the study of a subject of so much collateral importance.

Experience has taught us that fungi may exercise an injurious influence in at least three different directions, *viz.*, (1) either by permeating the soil, and injuring or destroying the roots, or (2) by establishing themselves in the tissues of the plant, and developing themselves outwards as true endophytes, or (3) by a kind of external parasitism, more or less covering the leaves and young branches, choking the stomata, checking growth, destroying the healthy functions, and ultimately causing death. These three modes of attack suggest the classing of our remarks under the heads of (1) Root fungi, (2) Endophytes, and (3) Epiphytes.

Root Fungi.—Horticulturists and Foresters in Britain have long recognized the secret but deleterious influences of root fungi, as evidenced by the numerous and oft-repeated complaints which have appeared from time to time, over a period of many years, in the pages of the *Gardener's Chronicle* and other

journals devoted to horticulture. Vines have been described as suffering from attacks of root fungi. Shrubs withering and dying beneath the insiduous attacks of fungi at roots, and whole plantations of young trees being cut off by some unseen destroyer, which at length was discovered in the soil. Hundreds of instances are on record to substantiate the fact that conditions of fungi, mostly in the state of mycelium, or root-like threads and fibrils, can, and do, permeate the soil, and injure or destroy growing plants to a considerable extent. There is no external appearance of this enemy manifest, until the condition of the plant itself gives indication that something is going wrong. It is only by breaking and turning the soil that the cause is revealed, and it happens not unfrequently that the unaided eye is insufficient to detect its presence. Causes and cure are alike too little within the scope of human control.

Fungi of the mushroom type are known to be developed from a mass of delicate fibrils which penetrate and interlace the soil, and to this filamentous material, which to Fungologists is known by the name of Mycelium, the common name of "spawn" is applied. It is just this kind of substance which accomplishes all the mischief comprised under the term of "root fungi." It is not a complete and perfect fungus, but the "mycelium" or "spawn" of some such fungus as an Agaric, a species of *Polyporus* or some *Thelephora*. This kind of mycelium, or incipient fungus, is almost certain of development from rotting wood, decaying leaves, or vegetable matter of any kind during decomposition. Hence all soil containing vegetable substances in a state of decay contains the elements of root fungi. This may be illustrated by two or three recorded instances. Two Deodars were planted near the Director's house at the Royal Gardens at Kew, one grew, the other did not, and it was afterwards discovered that, where the latter had been planted an old cherry tree had been cut down; the inference was that the fungi on the dead wood left, had attacked the living roots of the Deodar, causing the tree to fall into ill health. This was adduced as the true explanation, why one tree often refuses to grow where another had stood before.*

* *Gardener's Chronicle*, 1865, p. 462.

A fine *Wellingtonia gigantea*, standing in the grounds of Portnall Park, was destroyed, and afterwards the cause of death investigated. A sickly hue spread over the branches, all that skill and intelligence could devise was done for it, but alas! its doom was fixed, and in a short time this much-cherished favourite was a dried stick. Fungous spawn had penetrated every part of its system, a white kind of net-work was found under the bark of all its roots, and it was believed that the enemy was some species of *Polyporus* or *Thelephora*, in the mycelioid condition. In commenting upon this incident the Rev. M. J. Berkeley remarks that he had a noble *Cupressus macrocarpa* affected in the same way. He recommended that in planting on the same spot, it would be prudent to trench the ground deeply, and get out, if possible, every fibre of the deep roots, as each fragment might be affected, and would perhaps propagate the mischief, even if the new tree were planted at some distance.*

Shortly after the above was recorded another instance appeared in the same journal. The writer says that early in the year (1865) he had some hundreds of Conifers, which he noticed were rapidly losing health, and assuming a sickly hue, which steadily increased. He saw that they were attacked by fungi, and that some means must at once be taken to check the evil. Many of the plants were 11 and 12 feet in height. The greater part of them consisted of Deodars, *Pinus excelsa*, *Abies Douglassii*, *Abies Menziesii*, and *Cupressus Lawsoniana*. The remainder were *Wellingtonias*, *Abies Webbiana*, *Abies morinda*, *Arbor vitæ*, *&c.* All were planted in a nursery, the soil of which was for the most part about one half shingle, and the sub-soil entirely of that description. He had all the plants taken up, and every particle of soil shaken from their roots. He found that every plant was attacked by fungi, and that most of them had lost at least two-thirds of their roots, which were entirely covered with, and penetrated by, minute thread-like processes, forming a thick net-work all over them, sometimes, indeed, assuming the appearance of small lumps of spawn. After the plants were taken up, he had the roots well-washed in

* *Gardener's Chronicle*, 1865, p. 1037.

pure water, until not a particle of spawn could be seen on them, what were left were then cut back to three or four inches beyond the decayed parts. On examining the soil in which the trees had been planted, he found partially decayed leaves and small pieces of decayed wood, which were doubtless the cause of the mischief. Leaf mould had been applied to give the plants a start, which however, as has been seen, was in the wrong direction. Every leaf and bit of wood was the nucleus of disease. He was compelled to plant again in the same ground, after removing the soil and putting maiden loam in its place. Trenches were opened, and the plants were well puddled in, and slaked in cases where they required such support. Some 1,000 plants were treated in this manner, to which was added syringing morning and evening in very hot weather. The loss was less than one per cent. The plants were lifted and re-planted at the latter end of March.*

This, and similar instances, induced some remarks by the Rev. M. J. Berkeley on the subject, and it must be remembered that this gentleman speaks with the experience of nearly half a century, largely devoted to the diseases of plants, especially of a fungoid character, and their antidotes. He wrote:—"Every day proves more clearly what great caution ought to be exercised in planting on ground which has formerly been occupied by trees. A few sceptical remarks are occasionally heard, leaning simply on mere negatives, but the positive proofs are too numerous and stringent to leave any room for doubt. We have now before us a portion of the roots of a *Wellingtonia*, which were in close proximity to an old decayed post, and are now densely clothed with fungous spawn, which is rapidly destroying the tree, one of an avenue of 160, and fears are entertained that the rest will suffer. Different remedies have been tried without success, and we feel convinced that any chemical which could reach the diseased roots through the soil, would soon destroy those roots which still remain sound. The only plan likely to succeed is to lift the trees carefully and prune away every diseased root. We have known this treatment successful, and can suggest no

* *Gardener's Chronicle*, 1865, p. 1061.

other. There is little doubt that a large portion of the larch rot is due to this cause, and we have been informed by an extensive forest owner in Scotland that, after a plantation of Scotch fir is cut down, it is useless re-planting it till the ground is covered with strong heather, by which time the old roots have lost their power of mischief. In this, as in many other instances, prevention is much easier than the cure. If trees must be planted where others have preceded them, there is little chance of success, except the ground is deeply trenched and every root removed."* †

It will probably be urged that on forest land, and especially in tropical countries, it is impracticable to suggest clearing the soil of old roots, stumps, and decaying vegetable matter. That it has always been the practice to leave all this kind of débris to rot and decay in the ground, and that, upon the whole, it does not prove deleterious. That coffee is constantly planted on such roughly-cleared forest land, with the rotting stumps left, and the soil covered with rotting twigs. And yet coffee plantations flourish, and nurseries of forest trees suceeed under such conditions. It may be so, but the danger always exists, and if any temporary weakness or sickness should fall upon such a plantation, root fungi will then seize upon the weakened roots and demonstrate their presence and their power.

In the majority of cases recorded, in which death or disease has been caused by root fungi, the suffering trees have belonged to the *Coniferæ*, but they are by no means the only kind of tree subject to similar attacks. We have before us a record of a greengage tree which died, and was succeeded by a peach tree, which grew with the utmost luxuriance, but at once withered from the contact of the old roots. The ground was then most carefully trenched, but apparently not far enough, as a scarlet flowered chestnut, which was planted within their reach, and which for two years flowered well, though it was only a seedling of four or five years old, after flowering in 1866 caused great surprise by dying suddenly. The roots, even the

* *Gardener's Chronicle*, 1865, p. 1153.

† This may be true in some cases, especially when the locality is not suited to the species, but it will certainly not hold good in the general form here given.—[THE EDITOR].

merest fibres, on examination were found covered with spawn which had run between the bark and the wood, and formed a white film. It is probable that the enemy was the mycelium of *Polyporus igneus*, which is white, but it is very rarely that an opportunity occurs of ascertaining to what species the destructive mycelium belongs.*

Another instance is recorded of the examination of the border of a conservatory, the sickly appearance of the vegetation planted therein having indicated something wrong. The soil from two inches to a foot in depth below the surface was found to be like a mass of snow with fungous spawn. Its origin was traced to some staves of a wooden tub which had been left in the border. The roots of Oranges, Camellias, Acacias, Clethras, and Neriums literally crumbled to pieces on being touched.†

Knowing what an insiduous foe we have to deal with in this kind of fungoid disease, it is not unnatural that we should sometimes suspect that in tea plantations and in coffee plantations, as well as in nurseries of forest trees, this enemy has been the secret cause of much mischief in the past, and that too little attention has been applied in this direction. Having now pointed out what to us appears to be a grave source of danger, we must leave the suggestions with Forest Officers to apply them in their own individual cases, and satisfy themselves that this form of disease is, or is not, one which affects them, or the districts under their care.

ENDOPHYTES are fungi which enter by any means into the substance of young and growing plants, and develope themselves outwardly, by bursting through the cuticle of the leaves and young branches, when they become prominent objects, distorting and at length killing the trees, or at least stunting and deforming them. Of this class are the species of *Peridermium* which attack the leaves and young branches of Conifers—or rather it should be said, they burst through and develope themselves on the leaves and twigs, scattering abroad their

* *Gardener's Chronicle*, 1866, p. 1017.
† *Ib.* 1867. p. 105.

myriad spores in a yellow or orange-coloured dust. Such also are the species of *Podisoma* which cause gouty swellings of the branches of Junipers and Cypresses, and burst through the bark in gelatinous orange or brown protruberances. At a future time it may prove advantageous if we enter more into the details of this class of parasites, and especially as to their structure, mode of development, and reproduction, and such suggestions as may, from time to time, offer themselves as helps towards their eradication.

EPIPHYTES are those fungi which, by spreading over the surface of the leaves and other green parts of growing plants, choke up the stomata, check all transpiration and literally choke the plants to death. These fungi attack evergreen and deciduous trees alike, and are not less deleterious in their influences than the last named kind. Some have a glaucous, whitish, or mouldy appearance, as the numerous species of *Erysiphe*; whilst others are almost black, resembling a coating of soot, as the species of *Capnodium asterina*, *Meliola*, &c., and these like the former must receive special illustration.

Finally it may be permitted us to suggest that in order to render our further remarks and illustrations of these parasites as complete and practical as possible, it would be of considerable assistance if Forest Officers in all parts of India would kindly collect and forward to us, through the Inspector General, specimens of leaves and twigs of trees of all kinds which come under their knowledge, which are affected or injured by parasitic fungi. In all instances the Botanical name of the tree, locality, and date should be attached.

It is admitted that this is a somewhat difficult task, not easily accomplished by those who have paid no special attention to a complicated subject like that of fungi, but in the course of time the eye will become educated to detect at once diseases of fungoid origin, notwithstanding the difficulties which encompass all early efforts. As our communications to this journal proceed we hope to be able to remove some of the difficulties, and in a plain phraseology, denuded as much as possible of technicalities, to give such hints and suggestions as will enable Forest Officers in India to pursue this subject for themselves, and to ascertain

how far, and in what direction fungal diseases are prevalent and injurious to the forest vegetation of India.

INDIA MUSEUM, LONDON, *January 2nd*, 1877.

A River Officer's Journal on the Jhilam.

By F. O. LE MARCHAND.

THE chief transit depôt or station to which all timber rafted down the river is taken for examination and record on the river is at Baghám, a place about 25 miles from Gújarkhán. This is reached by regular dâk on the Grand Trunk Road as far as Gújarkhán, after which we ride to Baghám. The return journey is down the Jhilam by boat.

Leaving Jhilam station, the Grand Trunk Road is level for the first six or seven miles out of Jhilam, when it gradually rises into a long low chain of hills, a continuation of the Salt Range, and after winding about for three or four miles, descends into a valley through which it continues for nearly seven or eight miles in almost a perfectly straight line.

The valley is beautifully green with rich cultivation, as far as the eye can see, and at every ten or twelve miles or so are Government rest-houses and "serais" for travellers.

Once more we cross a low ridge of sand-stone hills, another branch of the Salt Range; the bare bleak appearance of the ridge is most melancholy after the beautiful cultivation we have just passed. Not a tree or a shrub is visible; every now and again a solitary post may be seen to indicate the proposed Northern State Railway line: and yet this, I believe, is one of our "rakhs" called "reserves" reduced to this condition for the sake of "keeping every body happy" by refusing to place any restrictions on grazing or wood-cutting.

I arrived at Gújarkhán at dusk, a bath and the usual dâk bungalow dinner concluding the day. The ride next morning, however, made up for the disagreeableness endured the day before, and I enjoyed a splendid gallop of nearly twelve miles through a cultivated country, the quail and grey partridges calling all round, while occasionally a sly old jackal would steal away quietly across the road.

At the twelfth mile the scene changes, and the road (through a low range of hills) becomes bad and stony. To go out for a walk was impossible, so I did not get into camp till past 10 o'clock. The sun being very hot, and no tents up, I cleared out one of the new stables and out-houses we are building here, and made myself as comfortable as I might for the day.

Arrived at Baghám, my work now commenced. Above Baghám, the river sub-division extends to a distance of about sixty miles to a place called Salegrám, the first of the catching depôts, and the furthest point up the river from which rafting can be done. Between these two places there are seven or eight catching depôts, at distances of from five to ten miles apart. These points have been selected, owing to there being back-waters and eddies into which the logs are naturally carried; they are then secured by raftmen, who swim out after them on "mussaks" (inflated goat skins), they are finally tied up into rafts and brought down to the Baghám transit depôt. The ropes used for tying the rafts are made up of the "bhabbar" grass that grows on the hill sides near at hand, and the rafts are steered by rough oars made up of broken bits of wood caught floating down the river.

On arrival of the rafts at the transit depôt, the Forester in charge immediately proceeds with a pot of red paint (gerú) and marks each log with the letter of the catching depôt they are brought from, for instance, S shows they were caught at Salegrám, D from Dangully, B from Bul. This is necessary as different rates are paid for different distances. After marking the logs thus, they are measured on the water and the raftmen paid, they are then hauled up into the depôt, where the letter of the catching depôt is cut out on the logs, each log is remeasured, numbered, and rolled into sections according to its class and description. Waif timber is kept separate from Government timber, as at the close of the year when the accounts are made out, the Maharajah of Cashmere gets two-thirds of the *nett* proceeds of the sales of it (after deducting expenditure incurred in collecting it.) A register is kept in which each log is entered with its number, marks, and measurements. At the close of the catching season, these logs are despatched to the sale depôt.

With each raft that leaves, the raftman in charge is given a challán, in which is shown the description of each log, marks and measurements, name of raftman, date of despatch, and rafting material; the duplicate of it being despatched the day before to the depôt officer.

Besides the works enumerated above, others of a more harassing nature have to be attended to; there are no less than five other timber traders on the river whose logs are caught at the same places as ours, and whose rafts have to be inspected at the transit depôt, where the measurement and description of each log is entered daily in a book. Every quarter a statement of such timber is sent to the Conservator of Forests as imports from foreign territory. This, of course, gives us exactly five times as much work as we would have, could this statement be got out of the traders direct, but then, on the other hand, it prevents their stealing Government timber to a great extent. Here indeed is where all the disputes arise: rafts often come down with more timber than is stated in their challans, and the surplus is at once detained. Then again newly cut marks are sometimes discovered, which have probably been put on somewhere up the river, these also are seized until satisfactorily accounted for.

At certain appointed places the villagers are allowed to collect as firewood pieces caught floating down the river, they receiving in lieu of payment a quarter of all they catch. These heaps have frequently to be inspected, to prevent theft, and also to stop the villagers from smuggling in larger logs under the firewood pieces, which they are very fond of doing.

About a mile, or probably less, from the transit depôt, a very nice forest-house is being constructed on the top of a rocky hill, the sides of which, running perpendicularly down to the rushing river below, are nearly encircled by the waters. In the distance the rock looks like a young Gibraltar, only that it is black. From the summit the transit depôt and river, above and below for a long distance, are visible, and it is altogether a most picturesque spot.

The transit depôt is situated on a plain that once formed the bed of the river, but the stream changed its course, and

left a huge semi-circular plain, covered with round boulders. The river is now cutting into the opposite bank (in Cashmere territory), which towers over 200 feet above the level of the water, and large masses of stone and earth can be seen falling away daily. Under this cliff is one of the dangerous parts of the river; above it is a rapid, and the troubled waters strike the hill full in the centre, and curl back with great force, forming a nasty whirlpool into which the rafts are often carried and broken up.

I will presently give a description of the river and my journey down it, but meanwhile it may not be out of place here, to make a few remarks on the low hill forests that clothe both banks of the river Jhilam, and are, I believe, under the charge of the Forest Department.

From the foot of the Murree hills to within twelve miles of Jhilam (a distance of nearly sixty miles) is a long range of sandstone and boulder hills that run all along and form both banks of the river Jhilam, the east side being Cashmere, and the west British, territory.

Both these ranges are very fairly covered with phulai (*Acacia modesta*) and sanetta (*Dodonea viscosa, L.*) the latter growing to an extraordinary size, and in some places forming an almost impenetrable jungle. *Pinus longifolia* is scattered about in the forests, the first two stages out of Murree, and though large trees are not very numerous, there are any number of young saplings from two to twelve feet in height.

The population is small; there are only a few villages down the valleys on the west side of the range, the east (the side that faces the river) being for miles without a village; the conquence is that the forests facing the river are in a better condition than those on the opposite side of the range, they being less cut up.

These undoubtedly will be the forests from which we shall by and bye get most of our supply of fuel for the use of the Punjab Northern State Railway, and they should be strictly preserved.

The facilities for transport are considerable; the river which skirts the whole length of the forests is navigable by boats for

nine months in the year. During the remaining three, when the river is in flood and almost too rapid for boats, the wood could be brought down on rafts and landed at Baghám, where our transit depôt is, and boated down to Jhilam during the winter, or for the matter of that, Baghám might be made a sale depôt for the Pindee market; there is a fairly good road from it to Gújarkhán (twenty miles) past which the railway will run by and bye, and we hope soon! Some time ago the raftmen found it such a paying thing bringing down this firewood to Jhilam on their rafts, that numbers of them would hurry back to bring another supply sooner than wait to have their rafts measured and be paid for them. Most of the firewood was got out of the Cashmere territory, but as they could show no authority for being in possession of and bringing it down, I put a stop to it by threatening to confiscate any that passed Baghám.

I will now conclude with a description of my journey back by boat to Jhilam. The boat was of the shape usual on the Jhilam, and probably unchanged since the days of Alexander the Great. It is square at both ends, with bow and stern raised, and capable of holding two hundred maunds.* On starting, I was rather amused with a Hindu we had on board who, to appease the troubled waters, threw in a handful of sugar and repeated a prayer. There was a good stream on, and our boat rushed ahead at a great pace: we passed several nasty places where the current carried us with full force towards either a projecting rock or bend of a hill, and then just as you thought all was up with the boat and crew, it suddenly sheered off. The huge perpendicular rocks we passed were most picturesque and grand: sitting in the boat as it passed under the very foot of these immense cliffs, it was as much as you could do to see their tops; several of them were crowded with wild pigeon which had their nests in the holes and crevices of the rocks: hawks and kites also had made their homes in these safe fortresses, where nothing on earth could touch them, and in one or two of these places wherever a long

* *Vide* Punjab Products by Baden-Powell, Vol. II., p. 253, where there is a sketch of such a boat, and a detailed account of it.

ledge projects, can be seen numbers of black cormorants during the cold weather, which swim about the rapids and dive for fish.

About six or seven miles from Bagham we passed one of the Maharajah of Cashmere's forts ("Ramkot") rather an imposing looking building, situated on the top of a high cliff, and surrounded on two sides by the river. There are three or four of these forts up the river, between Jhilam and Murree, and all are occupied by the Maharajah's soldiers and guns. Soon after passing Fort Ramkot we reached Tangrot, the famous fishing-place, where some of the biggest fishes in the Punjab have been caught: the largest on record (for a regular angler's book is kept up here to show all catches) is 72-lbs.: the largest I ever caught weighed 52-lbs. During the fishing season, Tangrot is overrun with people who come up from all parts of India to try their luck, I have met people who actually came up from Calcutta, Hazaribagh, and Saugor. There is a capital dâk bungalow and accommodation for horses. It is here that the two rivers, the Púnch, which comes down through the Cashmere territory, and the Jhilam meet, and it is at "the meeting of the waters" that most of the big fishes have been landed.

I believe, about thirty miles up the Púnch are some very good *Pinus longifolia* (chíl) forests, out of which *thousands* of baihees (bed posts) are cut every year and floated down to Jhilam, Shahpur, Multan, and Kurachee. I have seen this river *covered* with these posts, which are about seven feet in length, and from six to eight inches in girth; they find a ready sale at Jhilam, Pind Dadun Khan, Shahpur and in fact at all the larger cities all along the river bank; their prices range from As. 2 to 4 each in their rough state.

After breakfast we again weighed anchor and started for Dulyál, the first of our sale depôts: an hour and a half's rowing brought us to Sultanpur, the last catching place on the river. The river from Tangrót to Sultanpur is very rapid, and winds about continually, the distance by road though only five miles, by river must be double that, to have taken an hour and half to do. At Sultanpur very little large timber is caught;

in fact, only the few logs that manage to get past the several catching places above; but the banks under the village are covered with any quantity of small pieces of firewood caught by the "Maneárs" (bracelet-makers), a race of people who never go in for agriculture, but gain their living entirely by making up the lacquered bracelets called "chúri," worn by women. At the close of the catching season about October or November, they get a quarter of all they catch as a reward for collecting it, and the remainder is put up to public auction, and often bought in by them also. Once past Sultanpur we were in pretty safe waters, and here again we passed another one of the Cashmere Rajah's forts called Mungla, situated on the last hill near the river's edge. From this point the country on both sides is flat, in another hour we were safely landed at Dulyál, which is within fourteen miles of Jhilam over a good kutcha road.

The reason for making a sale depôt here was for the purpose of supplying the Punjab Northern State Railway, who had taken up the old saw mills at this place. They were worked by the railway for about five years to saw up sleepers, but finding that the work could be done cheaper by hand-saws, they abandoned them. I remained the night at Dulyál and inspected the depôt during the evening. At Dulyál, there is another nice dâk bungalow made for the accommodation of enthusiastic anglers, for nobody but those who come expressly for fishing ever visits these spots.

The next morning we started again on our pleasant voyage. The river from this point divides into three streams, between each of which there are some excellent belas (islands) covered with beautiful sissú, which are under the charge of the Forest Department; these belas are partly self-sown, and where there are no sissú, the "pilchí" (tamarisk) grows profusely: the largest one I measured was twenty-five inches in maximum girth; and about twelve feet high. The three streams meet about 12 miles (by river) below Dûlyál at a place called Gatiali: the timber can only be floated down them during the floods, but the net-work of islands or "chandas" formed by them has been of great service to us in preventing our

timber during heavy floods from getting past the sale depôt at Jhilam. The logs get stranded on them, and are afterwards collected and rafted down to Jhilam by a gang of coolies kept on by the contractor for this purpose. The drawback is that these logs come down without "chullàns," so that there is really no check whatever on the contractor, the *one* Forest guard allowed for this portion of the river being the only protection, and the contractor if hand-and-glove with the depôt subordinates, and the guard *below* Jhilam might easily dispose of the timber without fear of detection.*

Both banks of the river below Dulyál are flat and richly cultivated, and during the cold weather when the young corn is about four or five inches high, any quantity of wild fowl, such as geese and koolan can be seen feeding in the fields; ducks and teal are to be found all along the banks of the smaller streams, and below Gatiali during a hot sunshiny day, huge alligators like great logs can be seen basking on the sands. Within a couple of miles of the Jhilam station is one of the finest of the sissú islands, called the Bela Pírá Ghâib, about 850 acres in extent, which is in charge of the river officer. It is a mixed artificial forest of sissú, mulberry, and *Execaria sebifera* of all ages from a year up to 20 years old. Here some interesting experiments are just being tried with the mulberry trees, which are planted under the largest sissú trees, so as to form an undergrowth. In one of these sissú islands below Jhilam, known as the Sailá bela, there is a dense growth of self-sown mulberry undergrowth, and in patches where the sissú trees have died out, the mulberry has taken its place. Soon after passing this bela, you come to the Jhilam Railway bridge, and then into the Government timber sale depôt.

A list is made of all logs that happen to get past Jhilam, and after the rafting season they are sold by public auction.

---

* We collected 1,392 logs *this* year from these chandas.

II.—Reviews.

Report on the Forest Administration in the Several Provinces under the Government of India, with a Review by the Inspector-General of Forests.—1874-75.

The above volume has at last made its appearance. As it seems useless to expect the publication of such works at an earlier date than two years after the close of the year, we shall not make any further remarks on this subject, but proceed at once to business.

It is not our intention to review each provincial report separately, but we shall restrict ourselves to recording the chief events of the year, as they are exhibited in the Inspector-General's review, accompanied by such short remarks as may seem to us called for.

Introduction.

It is evident from what has been said, that the Inspector-General does not think much of general reviews like the present, and that he proceeds to it reluctantly, but in obedience to the orders of Government. We ourselves think a general review very useful, because it induces those not directly concerned to obtain some idea of the progress of forest management during the year, which most of them would certainly not obtain, if they had to wade through the lengthy provincial reports full of statistical data, which are, of course, dry reading to an outsider, and, we fear, also to many of those directly concerned.

Chapter I.

Reserves and Leased Forests.

This chapter is divided into four sections:—namely Area, Protection from Fire, Plantations, and Forest Surveys.

1. *Area.*—The area of reserves stood as follows on the 31st March 1875.

Provinces.	Reserves.	Leased Forests.	TOTAL
British.			
1 Bengal ...	1,467	...	1,467
2 North-Western Provinces ...	1,210	...	1,210
3 Punjab	3,617	165	3,782
4 Oudh	824	...	824
5 Central Provinces ...	2,133	...	2,133
6 Burma	563	...	563
7 Assam	602	...	602
8 Coorg	380	...	380
9 Ajmere	Demarcation in progress.		
Total ...	10,796	165	10,961
Non-British.			
10 Mysore ...	449	...	449
11 Berar	661	...	661
Total ...	1,110	...	1,110
Grand Total ...	11,906	165	12,071

As the area of reserves on the 1st April 1874 amounted to 10,003 square miles, the increase during the year amounts to 2,068 square miles, which took place chiefly in Bengal, the Central Provinces, Burma, and Assam.

2. *Protection from Fire.*—The area protected during the year stands thus:—

Provinces.	Acres.	Total outlay from the commencement.	Commencement of fire conservancy.
British.		Rs.	
1 Bengal	10,920	290	1,872
2 North-Western Provinces ...	92,938	8,786	...
3 Punjab	None specially protected.		
4 Oudh	20,480	2,847	1871
5 Central Provinces ...	1,64,164	40,894	1864
6 British Burma ...	45,402	14,551	1872
7 Assam	33,600	1,296	1872
8 Coorg	...	...	...
9 Ajmere	...	...	...
Total ...	3,67,504	6,8664	...

Provinces.	Acres.	Total outlay from the commencement.	Commencement of fire conservancy.
Non-British.			
10 Mysore	11,520	...	1866
11 Berar	364,800	1,891	1870
Total ...	3,76,320	1,891	...
Grand Total ...	7,43,824	70,555	...

The total area amounts to 743,824 acres, against 633,682 in 1873-74, thus exhibiting steady progress.

3. *Plantations.*—The progress under this head may be judged from the following table:—

Provinces.	Area at the commencement of the year.	Area added during the year.	Area excluded during the year.	Area at the close of the year.	Previous cost	Outlay during the year	Total outlay.	REMARKS.
British.	Acres.	Acres.	Acres.	Acres.	Rs.	Rs.	Rs.	
1 Bengal ..	343	84	...	427	22,602	8,224	30,826	
2 N.-W. Provinces.	829	304	...	11,35	16,043	2,642	18,685	
3 Punjab ..	15,377	900	...	16,277	5,989,48	64,404	6,6,3352	
4 Oudh ...	180	171	–	351	6,095	1,229	7,324	
5 Central Provinces	...	...	..	....	...	...	...	
6 British Burma ...	2,237	256*	...	2,493	1,67,758	16,729	1,84,487	* Toungya plantations, and small experimental plots excluded.
7 Assam ...	269	44	..	313	6,935	7,353	14,288	
8 Coorg ...	426	29	...	455	20,265	3,758	24,023	
9 Ajmere ...	...	...	..	...	...	...	...	
Total ...	19,661	1,788	...	21,451	8,38,646	1,04,339	9,42,985	
Non-British.								
10 Mysore ..	1,459	740	...	2,199	51,477	20.301	71,778	
11 Berar ...	1,260	1,130	52	2,338	16,049	9,039	25,088	
Total ...	2,719	1,870	52	4,537	67,526	22,340	96,866	
Grand Total ...	22,380	3,658	52	25,988	9,06,172	1,33,679	10,39,851	

The area has risen during the year from 22,380 to 25,988 acres, the chief increase having taken place in the Punjab, North-Western Provinces, and British Burma.

The outlay on plantations during the year amounts to Rs. 133,679, which is equal to nearly 3 per cent. of the total revenue of the year. We should have no objection to raise to this expenditure, if there were signs of a corresponding sum being devoted to assist the reproduction of our natural forests. There are, no doubt, instances where entirely new

plantations are indicated, as in Burma and the Punjab, but in most provinces, we fear, the natural forests are liable to be overlooked in favor of so-called plantations. We shall not make any further remarks on this subject at present, but we hope that the Inspector-General of Forests in his next annual review will be able to open a section, in which to record the progress made in assisting natural reproduction. Until that section stands side by side with that of "Plantations," it cannot be said that we do justice to the natural forests.

4. *Surveys.*—The work done between the 1st October 1874 and the 30th September 1875 is indicated in the following manner:

"The survey of the Dehra Dun forests in connection with the operations of the Great Trigonometrical Survey was continued throughout the season.

The following is a statement of the work done—

Boundary traversing in the field	...	29 miles.
Interior ditto ...	...	297 „
Total	...	326 „
Boundary transversing computed	...	309 miles.
Interior ditto ...	...	329 „
Ditto angle plotted ...	...	4 „
Total	...	642 „
Point fixed by triangulation ...	...	108 miles.
Ditto interpolation ...	...	26 „
		134 „
Plane tabling on 4 inches = one mile completed about ...	...	287¾ square miles.
Ditto ditto nearly completed		31¾ „ „
Main drainage surveyed ...	...	83¾ „ „

The forest lands on the following sheets were drawn for photozincography:—

I. III, IV, V, VIII, IX, X, XI, XII, XIX, XX, and XXI. Copies of all these sheets, except No. VIII, have been received and are now available.

A sketch map of the Deoban Working Circle was drawn. It was printed by the Surveyor General, and 275 copies of it were coloured in my office; 325 copies of Mr. Reynold's Hazara Maps were coloured and the forest boundaries were drawn on 63 sheets of the Khagan and Siran Revenue Survey maps. A map of the forest in Kumaun, Garhwal, Dehra Dun, and Jaunsar on the scale of 1 inch = 8 miles was commenced, and some large tracings of the 4 inch maps have been furnished to the Conservator, North-Western Provinces, and to the District Authorities."

In our review on the report for 1873-74, we made some lengthy remarks regarding the Survey Branch in its present constitution. We are happy to say that earnest endeavours are being made to re-organize the branch, though not in the manner indicated by us in the above mentioned review. It is intended to let the Survey Branch grow chiefly into a training school, where not only surveying and its allied branches, but also forest science and forest management are taught. We shall hail the day on which that project may become reality.

CHAPTER II.

Unreserved Forests.

The first part of this chapter is taken up by an explanation as to what "reserved" and "unreserved" forests mean; the second part shows clearly that all attempts to manage unreserved forests according to a reasonable plan have failed, and the Inspector-General winds up by saying, that the correct policy to pursue with regard to the unreserved forests is "steadily, as opportunity offers, to increase the area of the reserves."

It appears to us, that we have "played" too long with so-called unreserved forests, which after all means nothing more and nothing less, than forests destined for gradual, but certain destruction. The idea of exercising a certain amount of control over these forests until it becomes evident whether any part

of them is required as a reserved forest, looks very nice on paper, but it does very little good in reality. It would be far better to go boldly ahead and secure a good proportion of the area as reserves, rather than running after a phantom. If it should be found hereafter, that we have reserved too much, it is easy to throw open a portion of the area, but it is not so easy to restore a forest once cut down and burnt.

CHAPTER III.

Protection of Government Forests.

In this chapter the prosecutions for breaches of Forest Rules are enumerated, the result being as follows:—

Provinces.	No. of Persons.		
	Prosecuted.	Convicted or under trial.	Acquitted.
British.			
1 Bengal	42	35	7
2 North-Western Provinces ...	418	377	41
3 Punjab	768	716	52
4 Oudh	69	55	14
5 Central Provinces ...	706	639	67
6 British Burma ...	55	49	6
7 Coorg	4	4	...
8 Assam	8	8	...
Total ...	2,070	1,883	187
Non-British.			
9 Mysore	475	348	127
10 Berar	521	457	64
Total ...	996	805	191
Grand Total ...	3,066	2,688	378

CHAPTER IV.

Yield and Financial Results.

This is the last chapter of the review, and no doubt the one which has been written by our author with more relish, than any of those preceding. The yield and financial results are

FOREIGN SECRETARIAT LIBRARY

of course, the most important objects of all forest management, but they come or ought to come as the natural results, whereas it is of the very highest importance that the measures, by which that yield and those financial results are to be obtained, should be well considered, and in accordance with rational principles. Hence we should have liked to see a little more said about the improvement of our State forests, which latter subject has not even been deigned to deserve a separate chapter or section.

The following table exhibits a summary of the financial results of the year :—

Province.	Revenue.	Expenditure.	Surplus.	Deficit.
Bengal	1,85,933	99,403	86 530	...
North-Western Provinces ...	10,85,947	8,55,875	2,30,072	...
Punjab	8,34,874	6,46,480	1,88,394	...
Oudh	2,77,411	2.04.827	72,584	...
Central Provinces ..	6,61,779	2,94,239	3,67,540	...
Burma	10,74,802	6,62.638	4,12,164	..
Mysore	3,83,124	2,36,722	1,46,402	...
Coorg	58,012	37,999	20,013	..
Berar	2,60,674	91,389	1,69,285	..
Assam	64,749	59.523	5,226	...
Ajmere	203	26,566	...	26,363
Survey Branch	..	61,520	..	61,520
Total ..	48,87,508	32,77,181	16,10,327	...

If the above sums are arranged under the main heads of receipts and expenditure the subjoined table is obtained :—

Particulars.	Receipts.		Charges.	
	Amounts.	Budget heads.	Amounts.	Budget heads.
	Rs.		Rs.	
1. Timber and other produce removed on Government Account.	24,33,647	I-i	19,16,041	I-1, half of VIII and IX, Quarter of B.
2. Timber and other produce removed by purchasers, and other revenue.	24,53,861	I-2,3,II,III, IV,	4,77,005	I-2,3 II, VI and X, half of VIII, and IX, Quarter of B.
3. Formation, protection and improvement of the Forests.	...	...	8,84,135	III, IV, V, and VII, half of B.
Total ...	48,87,508		32,77,181	....

This table shows, that the surplus derived from material removed by Government agency amounts to a little over 5 lakhs of Rupees, while that derived from material removed by purchasers amounts to nearly 20 lakhs, but as it is nowhere shown how much material has been removed by purchasers in all provinces, as compared with that removed by Government agency, the comparison is of no value whatever. On the other hand, the arrangement is very useful in exhibiting the expenditure incurred on timber works, as compared with the receipts, especially in these days when timber operations are often conducted at a loss, and when financial authorities endeavour to show, that the Forest Department ought not to take credit for material made over to other Government Departments.

We add the subjoined table, which exhibits the financial results for the whole of India during the last 11 years :—

Year.	Revenue.	Expenditure.	Surplus.	Percentage of surplus as compared with revenue.
	Rs.	Rs.	Rs.	Per cent.
1864-65	38,17,819	18,86 364	19,31,455	51
1865-66	39,18,413	22,32,720	16,85,693	43
1866-67	33,53,777	21,20,171	12,33,606	37
1867-68	37,79,342	23,40,733	14,38,609	38
1868-69	46,36,769	27,21,514	19,15,255	41
1869-70	50,21,652	32,83,445	17,38,207	35
1870-71	51,67,799	39,74,097	11,93,702	23
1871-72	54,81,754	37,42,133	17,39,621	32
1872-73	63,36,766	41,72,111	21,64,655	34
1873-74	70,04,751	41,47,214	28,57,537	41
1874-75	64,75,829	44,91,173	19,84,656	31

As in our review on the report for 1873-74, so we have again this year to draw attention to the fact that the expenditure is increasing at a greater ratio, than the receipts; with other words, that the increase of the surplus does not keep pace with that of the revenue. It does, of course, not follow, that this is not fully justified, because in several provinces large additional areas have come under management of late yearly, which can not be expected to yield large amounts of

revenue all at once, although their management may require a considerable outlay. Nevertheless, we think that the fatal tendency pointed out above should be carefully watched.

The last part of the Inspector General's review gives details regarding the yield of cutch, lac, caoutchouc, sandalwood and bamboo paper stock, and then follow some general remarks from which we extract the following:—"The idea "that the production of timber is the only legitimate work "of Forest administration in India has fortunately now been "exploded, and it is acknowledged that the aim and object of "our exertions is the formation of large public estates to "be managed so as to secure, besides large benefits of an indirect "nature, a continuous and increasing yield of all descriptions "of forest produce necessary to meet the requirements of the "people and of export trade. The production of bamboos, grass, "fuel for consumption in the country, and of fibres, gums, "lac, and caoutchouc for export, is fully as important as the "production of timber, and the relative importance of forest "produce can, apart from advantages of an indirect nature, only "be measured by the annual quantity produced per acre "and the net money proceeds realised by their sale."

Broadly speaking, we have, perhaps, no fault to find with the Inspector General's view, but on going into detail we should wish to make a few remarks:

At the outset it is well to enquire on what grounds the formation of Government forests and their management by a Government Department is justified. In reply it must be pointed out, that if private enterprise was sufficient to secure the products generally derived from forests, there would be no necessity for keeping up State forests. Unfortunately, the nature of forests is such, that the interest derived from the capital invested in them is generally lower, than can be obtained by converting the forest products into money and using the land for other purposes. Hence it follows, that, generally speaking, forests left to private enterprise disappear, and forest products are no longer procurable in such quantity as is required for the welfare of the people and the State.* Under these circum-

* We do not speak here of forests which it is necessary to maintain for climatic or other indirect purposes.

stances it becomes the duty of Government to retain in their own hands so much forest, as is necessary to prevent the supply of forest products falling below what is required. To accomplish this various sacrifices must be made. In the first instance, here in India the formation of State forests is generally accompanied by the imposition of certain restrictions to the people living in the vicinity of the forests. Secondly, the Government must invest a considerable capital at an interest lower than what can be obtained by investing the capital in various other ways. Consequently it follows, that the leading principle in managing State forests must be based on the following two considerations:—

1*st*.—To use the State forests in the first instance for the production of such material, as are required for the people of the country; and

2*ndly*.—To derive, as far as this is compatible with what has been stated under first, the highest possible interest on the capital thus invested.

Applying this to Indian State forests, it is obvious, that our first duty is to produce the materials more directly required by the people, namely, timber, bamboos, grass, fuel, &c. for consumption in the country, and we can, therefore, not agree with the Inspector General when he says, that the production of these articles is not more important, than the production of fibres, gums, lac, and caoutchouc for export. On the other hand, we say that, as far as the production of the former articles admits, we are bound to make our forests yield as much as possible of the last mentioned products, in order to increase the net revenue and thus raise the interest on the capital invested. But we repeat, our *first* duty is to produce what is more directly required by the people, and the rest is of secondary consideration, though still of great importance. If it was otherwise, the State as such would in India proper in a few instances only be justified in maintaining State forests, and managing them by Government agency.

Sw.

The Pine Forest of Ravenna.

We have received a book by the Cavaliere Romolo Conti on the pine forests near Ravenna which have been at last acquired by the Municipality for public purposes.* The author first gives a historical sketch of these forests. Next follows a long account of the ill-treatment to which they have been subjected, and which led to their reduction and threatened extermination. After this the author goes on to urge rational treatment, and in so doing devotes many chapters to a sort of treatise on forestry generally, dealing with surveys, classification, and "*parcellaire*" of the forest, method of determining cubic contents, the possibility, annual yield, and so forth. Then he returns to the Ravenna forest and treats of forest rights, and of planting and improving the land.

He speaks in the concluding chapter as follows:—"The pine forest of Ravenna most celebrated as it was for its antiquity, and its splendid growth, is now only a shadow of its former self. In former days it extended over about 5,000 hectares (13,000 acres nearly): now it has been reduced on all sides, by an extended belt consisting of barren and marshy beds covering more than 670 hectares. In the interior are low-lying malarious swamps, barren blanks, and an infinity of cattle tracks cut up and deform the land for more than 1,300 hectares. In very few portions of the forest is the tree growth normal; it is very poor in the greater portion, and almost extinguished in others."

"The *Pinus maritima*, the dominant species of the locality, shows itself grandly on the furthest ridges extending towards the sea. But the growth rapidly decreases and is impoverished in the central portions, and almost disappears in the western extremity where it gives place to scattered oak and ash." This deplorable result has been brought about in the forest by the "devastations of the monks, the times, the ill-considered leases, and most murderous of all, by the exclusion of every precept of rational forestry which would here substitute true scientific principles for the false dicta of so-called practical men."

The consequence has been a general deterioration of the forest to less than two-fifths of its real capability, and a reduction

* Sul Pineto Ravennate. Notizie pensieri Del Cav. Romolo Conti. Capo Ingegnere del Municipio de Ravenna—Ravenna, 1876.

of its financial yield which various from four to six *lire* per hectare, whereas according to the most competent foresters, it might yield at least ten times as much.

The author concludes by urging the immediate advantages that would accrue from the planting, draining, and management of the forest, and refutes the idea that it would only be an expense undertaken without any return, for the benefit of distant generations.

It is to be hoped that a book so full of historical facts and sound principles will win the confidence of the authorities and induce them to place the forest under management. Not the less so, as the sufferings of Ravenna from malaria are notorious, and not the least benefit arising from proper management, would be the relief from this calamity.

Report on Gums.

THE remarks which Mr. Baden-Powell has communicated to your journal on this subject require from me a few words of explanation.

It may be premised that such a work as the "Report" undertaken here, must be surrounded by difficulties, not only from the absence of well-authenticated specimens—"Exhibition" specimens being usually scarcely reliable—the conflicting remarks of different writers, and the difficulty at such a distance of obtaining corroborative evidence, but also from the fact that badly written and ill-spelt native names alone often accompany the specimens sent to this country, without leaf, flower, or fruit of the tree from whence it was obtained. Under these circumstances, the only alternative was to reproduce the information at our disposal and thereby seek to correct error, and ultimately secure reliable histories of at least the principal and most important of Indian products. It was no part of the design contemplated by the report to reduce the native names to any one system of orthography, or attempt any correction, but simply to give them *as furnished* to us, or as contained in books, leaving their accuracy to be tested, and corrected, as one of the objects of the Report. It will be conceded, therefore, that with this general explanation no observa-

tion is necessary on the special instances indicated between pp. 169 and 172, especially since authorities even in India are not yet entirely unanimous on the subject of orthography.

Acacia catechu (p. 173). No sample of the gum is in the Museum from Burma. In Kurz's "Report on Pegu" it is said that the tree "exudes a blackish resin" (p. 401).

Acacia modesta (p. 173) is stated to be "omitted,"* but on referring to the Report at p. 6 it will be found.

Gossypium, (p. 174). "This is said to yield a gum. Surely, it must be a mistake." Very probably, but my authority for including it was the Madras Catalogue of 1855, Class IV, Sec. A, No. 215, "Cotton tree gum, Gossypium herbaceum," contributed by Dr. Waring. Surely, we had no right to ignore the testimony of such an authority, however much we might doubt whether some unaccountable error had not been made.

Odina Wodier.—Since the Report was issued, we have been favoured with specimens of *Odina* gum from the Oudh Forests which fully confirm Mr. Baden-Powell's observations that the gum of this tree is white and soluble, and that there is a darker gum, but still soluble, obtained from the same tree. These specimens from the Conservator of Forests are doubtless authentic and may be accepted as a solution of the problem. As to the 'varnish' from this tree, it rests solely on the authority of Dr. Birdwood's "Bombay Products," and may be confirmed or disproved in the same manner. The idea of "resin" being yielded by it is doubtless a falacy.

Sapindus.—The authorities are named in the Report for assuming that the soap nut tree yields a gum, and one of these appears to have been Mr. Baden-Powell (Punjab Products p. 414).

Semecarpus.—Kurz says also that this tree yields a brown gum (Pegu Report, p. 318.)

Tamarix.—It is 'Punjab Products' p. 397, which states that gum is obtained from *T. furas,* or *T. dioica.*

Zizyphus flexuosa.—Simli gum, stated to be the produce of

---

* The review does not state that *Acacia modesta* is omitted, but that a characteristic *habitat* of the tree, *viz.*, all over N. W. Punjab is omitted.—THE EDITOR.

Zizyphus flexuosa, was sent over for valuation from the North-West Provinces in 1872, and the names, both vulgar and scientific, were attached by the "Conservator of Forests, North-West Provinces."

Butea frondosa.—The remark that this tree has 'good timber' occurred in the observations made by Dr. Royle in his communication to the Asiatic Society. The 'Report' was not supposed to pronounce on the value of any timber, and certainly would not have applied such a term to the wood of *Butea frondosa.*

Gugal.—Undoubtedly all trees yielding gugal in India require investigation. There is an appreciable difference in the odour, taste, and consistency of gugal from different localities. At present all the references are uncertain.

Boswellia.—Specimens of Arabian olibanum have so often been sent to England as veritable Indian produce that it is difficult to determine which are really derived from the Indian tree. Good authentic samples of true Indian olibanum are a great desideratum.

Diospyros.—Since the Report was issued, two or three small samples of a dark resin have been received from the Assistant Resident at Hyderabad, said to have been collected in the forests of the Nizam's dominions, and to be the produce of *Diospyros melanoxylon.* Does any species of *Diospyros* yield a resin, and which?

Storax.—We should have thought Mr. Baden Powell sufficiently acquainted with botanical literature to know that the quotation of "*Platanus orientalis,* Pococke Trav. ii., pl. 89," as a synonym of *Liquidambar orientale* is quite different from asserting that the plane tree yields' Liquid storax,' and hence that his paragraph was quite unnecessary.

Teak-oil.—Probably some benevolent Forest Officer will take the hint, and supplement the few notes on this substance in the Report, by communicating a full account to the pages of the Indian Forester.

We have to thank Mr. Baden-Powell for calling attention to the Report in question, and for the suggestions he has offered. It would be a great source of satisfaction if the result should be manifested in the correction of error, and the solution of some

of the difficulties which have beset this as well as every other subject connected with Indian Products. For all assistance in this direction, from Forest Officers and others, we shall always be ready to accord our sincere thanks.

M. C. COOKE.

INDIA MUSEUM, LONDON, *January 12th*, 1877.

A Catalogue of Indian Birds.*

THE modest title of this book gives but a faint idea of its contents or its scope. It is the intention of the author to give a complete account of every *known* species, and the publication of each volume will, therefore, be looked forward to with interest, not only by men of science in Europe, but also by ornithologists in all parts of the world.

We presume that most of the readers of this periodical have followed the advice of a paternal, Government, and purchased a copy of Brandis' *Forest Flora:* Mr. Sharpe's first two volumes, containing only a description of all known diurnal and nocturnal birds of prey, are about twice the size of Dr. Brandis' book, and the reader will, therefore, be able to form some idea of the magnitude of the undertaking. Many years must pass away before such a work as this can be finished by a single man; it is, in fact, the work of a life-time, and the present generation of ornithologists will not cease to regret that it has not been undertaken by several ornithologists at once, in the same way as the *Flora* of British India has been commenced by a batch of botanists under the direction of Dr. Hooker. These volumes ought to take the place of Dr. Jerdon's "Birds of India." The descriptions are more exact and elaborate, and the whole arrangement of the subject far superior to that of Dr. Jerdon's book. One great fault in the latter is the absence of keys to the genera and species, which save the student endless trouble. This want is supplied in Mr. Sharpe's book, but we think—if we may venture to differ from so eminent an authority—that the arrangement he has adopted is open to objection; a short example from his book will suffice to make our mean-

---

* Catalogue of Birds in the British Museum. By R. B. Sharpe. Vols. I and II, 1874-75.

ing clear: take, for instance, his key to the genera of the *Vulturinæ*:—

		Genus.
A.	Nostrils rounded	1 Vultur.
B.	Nostrils perpendicular, rather oval.	
	A. Tarsus shorter than middle-toe—	
	a. 14 tail-feathers ...	2 Gyps.
	b. 12 tail-feathers ...	3 Pseudogyps.
	B. Tarsus larger than middle-toe—	
	c. Head bare, with fleshy folds and neck-lappet ...	4 Otogyps.
	d. Head covered with down, forming an occipital ridge; no neck-lappet...	5 Lophogyps.
C.	Nostrils horizontal	6 Neophron.

It will be observed that the eye does not readily detect the characteristics of each group in this key; on the contrary, a certain amount of searching is necessary before they are made out. This example is, however, a very simple one; many keys cover several pages each, and then the examination is much more troublesome. We would have preferred the following, to our mind much more simple, arrangement:—

Vulturinæ.	Nostrils rounded...			... 1 Vultur.
	Nostrils perpendicular, rather oval in shape.	Tarsus shorter than middle-toe.	14 tail-feathers	... 2 Gyps.
			12 tail-feathers	... 3 Pseudogyps.
		Tarsus larger than middle-toe.	Head bare, with fleshy fold and neck-lappet	4 Otogyps.
			Head covered with down, forming occipital ridge; no neck-lappet ...	... 5 Lophogyps.
	Nostrils horizontal			... 6 Neophron.

Each volume contains a series of well-executed, coloured plates, besides innumerable wood-cuts, illustrating peculiarities of structure, which greatly enhance the value of the book. The price of the two volumes is only 35 shillings, and, considering the time and labour that must have been spent on the work, they are a marvel of cheapness. As regards the scientific part of the book, the name of the author, who, it is scarcely necessary to say, is a distinguished ornithologist, ought to be a sufficient guarantee of its thoroughness; and as for the rest, the facilities for the study of the subject in London are such

as could be obtained in no other part of the world. That mistakes are sure to occur in the first edition of a work of this kind, it is unnecessary to say, but we may be pretty sure that, so far as the materials and data at his disposal are concerned, Mr. Sharpe is not likely to mislead us.—JANGALI BULBUL.

III.—Notes and Queries.

The Dalbergia Latifolia, does it produce Suckers?

For a long time I had answered this question in the negative. I had myself had, until lately, only very limited opportunities of observing the growth of this valuable species, and in none of the books or reports, in which I had sought for information, had I ever met with any statement or hint suggesting in the remotest manner the possibility of the tree throwing up suckers. So I felt sure that it did not; if it did, would a whole generation of foresters have passed away without noticing and prominently recording so important and obvious a fact regarding one of our best known and most prized timber trees? *

Last year, however, my faith was considerably shaken. In a small experimental nursery I had formed at Punasa, there were some seed-beds which had been sown with shisham (our vernacular name for this species) in the rains of 1875. I had employed watering very sparingly, in some of the beds not at all, with the object of testing the hardihood of the tree in its infancy. Most of the seedlings died down to the ground during the early part of the hot weather; the rest put forth tiny leaves in April, as if after a great effort. I felt disheartened, and without digging up the roots to ascertain the real truth, at once concluded that the greater number were dead. The beds were neglected; my dog froliced and rolled about over them; men, amongst them myself, trod on them to take a short cut to beds of other species, that were doing better. When I returned to Punasa in July, after the rains had set in, to my amazement and intense delight, I found the much-abused beds covered with vigorous little shisham plants: scarcely 20 per cent. of the seedlings had died. On a close examination I observed that, in the majority of cases each apparently dead seedling had been replaced by a bouquet of from three to five,

* If I am mistaken in making this very uncharitable assertion, I shall be only too happy to be corrected.

and even six and seven shoots. I explained this to myself at the time by supposing that shisham yearlings possess an unusually large number of buds at the base of the young stalk; but when a few days later I dug up the plants to remove them into nursery lines, I found that while some of the shoots had grown up from the crown of the root, many had taken their rise up to as much as 5 inches below that point, and in some instances all the shoots of a single bouquet had sprung up some inches underground, the upper portion of the original taproot having withered and died down to the topmost shoot, leaving behind its dry and still undecomposed remains (see *a.* in subjoined figure).

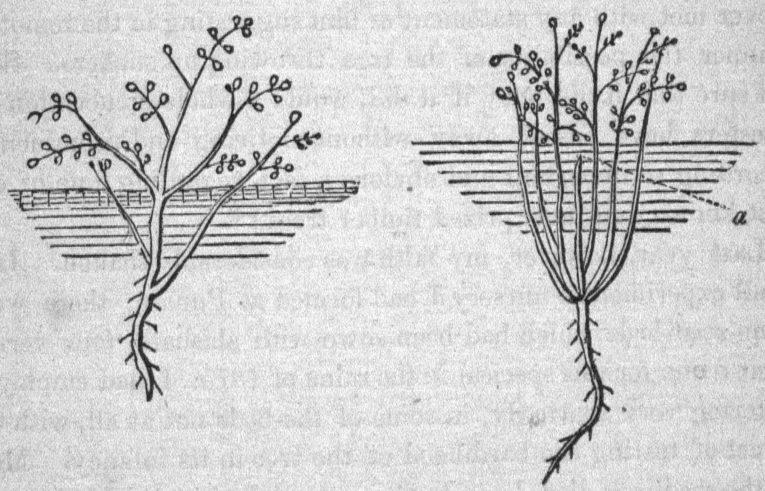

All these lateral shoots were articulated with the original taproot and hence easily broke off. That these were suckers in the full sense of the term does not admit of a moment's doubt; but if any further evidence were necessary, the following two striking circumstances could be adduced: 1*stly.*—In removing the plants from the seed-bed, the taproot in some instances broke off short only two or three inches below the lowest lateral shoot; in two of these instances, where the portion left in the ground chanced to be protected by a light covering of soil, and owing probably also to other causes that escaped observation, a thin, delicate shoot was thrown up about a month later; and 2*ndly*—A few of the lateral shoots which had sprung up from a point about five inches below the surface of the soil, and the lower portion of which consequently partook of the nature of a root, were

successfully transplanted after being severed from the parent root.

But if the yearling with slender, almost herbaceous roots, throws up suckers, are we justified in predicating the same of the grown-up tree with stout, woody roots and thick, tough bark? The complete solution of this question mere chance threw in my way, only a week ago. Strolling along the Ganjal, opposite the squatter hamlet of Kairi, I observed at the bottom of a sort of rocky alcove or recess, that the stream had cut in the bank, dense tufts of dark green shining leaves. On descending to the bottom, I was much pleased to find that they were shisham leaves. In the recent floods of the river a tree of about 2 feet 6 inches girth was broken off about a foot above the roots, which were laid bare, some of them along nearly their whole length; others only here and there for some distance from the stern, by the same cause. The tufts just referred to grew on these exposed portions of the roots at intervals of from 2 to 4 feet. Just a little above this tree, on the perpendicular side of the bank, was another smaller shisham presenting the same strange sight.

I have since extended my observations to a large number of shisham trees growing under normal conditions, and have now satisfied myself that the case observed in the alcove on the Ganjal is by no means an exceptional or rare one, as regards the production of suckers, although it illustrates this characteristic of the species in the most complete and unique manner.

How to turn to account this remarkable property of a tree, which yields one of the finest timbers in the world, and is a hardy denizen of our dry, deciduous forest, growing on the rockiest and steepest slopes, it would be pure waste of time to tell the readers of the Indian Forester.

E. E. FERNANDEZ.

CAMP PARWAN-BARWANI,
25th February 1877.

Amount of Water in Trees.

Extract from "Nature," February 8, 1877.

Farmers and gardeners have often observed, and the fact is referred to by Lindley, that during cold weather the branches of certain trees are sometimes so much bent down as to obstruct the passage below the tree, but that with the advent of mild weather they return to their former positions. In investigating these phenomena, Prof. Geleznow observed that they depend not only upon temperature, but also upon the humidity of the air; and he undertook, therefore, a series of researches to ascertain the amount of water contained in different parts of the branches under various atmospheric conditions. The first part of these researches (not yet published) proved (1) that the amount of water increases in each branch from its base to its summit; (2) that the bark of the larch throughout the year contains more water than the wood; and (3) that in Coniferæ the upper part, *i.e.*, the part above the pith of a horizontal branch, contains always more water than the lower part, whilst in other trees, as for instance the birch, the conditions are reversed; altogether, that Coniferæ and Dicotyledones seem to possess opposite properties, as regards the distribution of water in the tree. Further researches, published now in full (*Bull. Act. de St. Pétersb.*, vol xxii, No. 3), introduced new elements into the inquiry, namely, the varying amount of water in the bark and the wood. It appears from these researches that humidity of the wood and dryness of bark have a constant relation; that in certain trees (fir and maple) the wood remains throughout the year drier than the bark, while in others (birch and aspen) this is the case only during a part of the year, the conditions being reversed at other times. The relations between the humidity of the bark and that of the wood are so constant that a useful classification could be based on them. It appears, further, that the smallest amount of water contained by the branches of certain trees, as, for instance, the fir, is observed during the season when the vegetation is in fullest vigour, and that this circumstance, as well as some other important facts, is in close relation with the development of leaves. Altogether the researches, which are yet far from being completed, promise to disclose, and probably explain a variety of very interesting facts.

Extract from the "Indian Agriculturist" of March 1, 1877.

THE following receipt has proved very successful in the backwoods of America for removing the stumps of trees. In the autumn, bore a hole of one or two inches in diameter about eighteen inches deep; put in one and a half ounce of saltpetre, fill with water, and plug up close. In the following spring, put in the same hole half a gill of kerosine oil, and then light. The stump will smoulder away without blazing, and the fire will go to every part of the roots, leaving nothing but ashes.

It is impossible to exaggerate the importance of arresting the denudation of our forests, and if we stood in need of any warning against so fatal a proceeding, we should find it in what has taken place in Mauritius within less than the life-time of a single generation. Twenty years ago it was a *sanitarium* for invalids from India. To-day, it is one of the unhealthiest islands in the world. To what cause is this remarkable change attributable? The question is answered in the *Farmer* by Mr. H. Rogers, Senior Assistant Surgeon, Civil Hospital, Port Louis. He states that it is due almost exclusively to the denudation of the forest lands of the island, which has resulted in a diminished rainfall and increased temperature.

A novel and interesting experiment for felling trees by electricity instead of with the axe was recently attempted in the compound of the Strangers' Home, Bombay. The patentees of the process are Mr. H. S. Parkinson and Mr. W. H. Martin, both of Bombay, and the experiment was superintended by Dr. Lyons. The plan is simple. The two ends of the copper wires of a galvanic battery are connected with *platinum* wire, which, of course, instantly becomes red hot, and while in that state, it is gently *see-sawed* across the trunk of the tree to be felled. When arrangements were made for the experiment, it was never for a moment doubted that the enterprising merchants of Bombay were possessed of all the made thicknesses of *platinum* wire, but it turned out that the thickness of the thickest that could be got was only that of crochet cotton. It was at once seen that a wire of such thickness would be consumed before the tree was half severed from its trunk.

However, the attempt was made. The burning wire performed its task very well so long as it lasted, but, as anticipated, the wire continually broke, and at length there was no wire left. There can be little doubt that with a stronger battery—the one used was only a twelve-chambered one—and a thicker wire, the experiment would have been entirely successful. As it was, the tree was sawn one-fifth through. It is calculated that, under proper conditions, a tree which at present takes two hours to fell, will come to the ground by this process in fifteen minutes. It is almost needless to add that there is no waste of wood, no sawdust. The process is one worth the attention of all Governments engaged in forest clearing; and we hope to hear of its being tried on a large scale.*

Education of Forest Officers.

TO THE EDITOR OF THE "INDIAN FORESTER."

SIR,—In your issue of October 1876, there is an interesting letter from J. K. on the subject of the Education of Forest Officers in Europe. Many of your readers may, very likely, have seen in the "Quarterly Review" for July 1876 some remarks on the same subject, forming the concluding paragraphs of a review of several books on "Ornamental and Useful Tree-Planting." From these remarks I quote a few lines:—"Were a popular wind to set strong and steadfast in the direction of practical and profitable arboriculture, there would be no reason why, as now, we should have to send our candidates for appointments in the Indian Forests Department to perfect their arboricultural education in Germany at the cost of rate-payers, whose boast it is to have so many royal forests and national woodlands, not likely, it would seem from recent divisions, to run further risk of being disafforested, and turned to private and selfish use."

Now, Sir, it seems to me a great pity that such remarks should be made in so important and influential a review as the "Quarterly," especially as, I believe, they contain at least *one* misstatement. This is the first time that I have heard that the stipends paid to selected candidates sent for instruction

* First of all it will be interesting to ascertain on a small scale, what it will cost to fell a tree of a certain girth.—THE EDITOR.

to the forest schools of France and Germany were paid out of British and not Indian pockets. Again, what Sir, are these "many royal forests and national woodlands?" At the present moment I can only call to mind the following:—"The New Forest" "Windsor Forest" and "the Forest of Dean." Of the acreage of these forests I have at hand no exact data, but I should scarcely think the appointments in them would be sufficiently numerous to make it worth the while of the Home Government to establish a forest school; and the technical education to be obtained in them would, as well explained by J. K., scarcely suit the requirements of the Indian Department.

Were a forest school necessary for the training of Indian Foresters, to obviate the necessity of their being sent to France or Germany, it would most certainly be better to establish it in India itself, where, as pointed out by J. K., many of the operations of forestry can already be well taught, and where, at any rate, there are many officers of the highest rank in the Department who would be perfectly able to teach the elements of forestry as taught in France or Germany, modified to suit the requirements of our vast Indian forests.

I am, Sir,
Yours obediently
M. K. M. B.

31*st March* 1877.

Jhooming in Russia.

In a recent number of the St. Petersburgh Journal it is stated that this most destructive of all practices for the forests, known in this country under the various names of toungya, jhooming, dhya, koomrie, &c., is prevalent to a frightful extent in the Governorship of Wologda. As a rule, forests of broad-leaved species are preferred as possessing a richer soil. The trees are felled in autumn, the stumps being pulled up by the roots. All the felled material is collected in regularly spaced heaps, and in the following spring, generally towards the end of May, in dry weather, it is fired. The ashes are uniformly spread over the ground with hurdles made of branches or roots of the silver fir, and just before they are quite cold, flax seed is sown. The seed is sown thick, from 120 to 185lbs.

per acre, in order to obtain a long and fine staple. The cost of the seed varies from 2 annas 8 pies to 3 annas 7 pies a pound. In a good year the outturn per acre is about 350lbs. of seed and 700lbs. of cleaned fibre. This latter is worth nearly 5 annas a pound. The net receipts, after deducting sowing charges, are about Rs. 140 per acre. The second year a crop of rye is taken off, after which the ground is, for the most part, abandoned. If the site appears suitable for pasture, seed of the fodder grasses is sown at the same time as the rye, and for several successive years a crop of hay is obtained. As, on the one hand, the soil is too poor to remain under agricultural crops for any long period, and as, on the other hand, it has been neccessary to show much indulgence on account of the recent emancipation of the serfs, this method of cultivation has attained gigantic proportions. The consequence is that the wood supply for export is daily becoming a question of increasing difficulty in the tracts round the centres of population, and if matters are allowed to go on thus unchecked, the day is not far distant when it will completely fail.

MUHAFIZ-I-JANGAL.

Subordinate Establishment.

TO THE EDITOR OF THE "INDIAN FORESTER."

DEAR SIR,—I agree generally with the paper on the "Subordinate Forest Establishment" that appeared in the January number, Vol. II, of the *Indian Forester*. But as I take exception to some of the writer's remarks, I will briefly narrate the points on which we differ. Firstly, under head I., Mr. Elliot is prejudiced against Europeans as Rangers, and he depicts a very black picture of the uneducated "White." In para. 1, he says, "as a rule, Europeans who will take up these appointments, without hope, be it remembered, of obtaining any promotion, are such as have no respect for themselves, &c."

Why so? for, if they enter the department on 60 Rupees, and their salaries increase grade by grade to Rs. 200, (£20 a month in England is by no means unacceptable to the lower middle class,) surely these are steps up the ladder; there are

officers in the department whose prospects of promotion, *in proportion*, are not so bright. Para. 2.—If European Rangers are without education, they should never have been employed. Para. 4.—Usually Europeans are noted for their energy, and to place them in charge of Ranges in the forests, seems to me, to be exactly suitable to them. Educated natives, as a rule, shirk forest duties on account of their fear of fever and wild beasts, particularly the higher castes. Para. 5.—In my opinion it is the native who does not, although he *can*, travel in the hot weather. During this season he prefers journeying at night; while the European exposes himself unnecessarily, if anything, to the sun. Natives, I grant, make capital clerks, and all the smaller appointments, such as Foresters, &c., must be held by them; but as they take little responsibility on themselves, they would be valueless as Rangers. Unfortunately it is the prevailing custom to shunt Europeans, and substitute natives in *every* subordinate position.

6.—Presuming, therefore, that the services of moderately educated Europeans and East Indians are procurable, give them the preference. They should be required to pass in the rudiments of the vernacular of the district in which they apply for appointment within a certain period. Should they, on the other hand, not offer their services, then select natives who are qualified for the posts of Rangers. They should be well acquainted with the vernacular, and also be able to read, write, and freely converse in English; in addition I would enforce the production of a medical certificate to show whether they are physically fit for work in the forests. The gradation of the monthly pay I would propose is Rs. 60, 100, 150, and 200; with an allowance of Rs. 15, 22, 35, and 50. *All* Rangers should be competent to survey, previous to engagement. With reference to para. 7, I would leave it to the option of the officers. Para. 9.—Would not Rs. 20, 25, and 35 be better; granting an allowance of Rs. 5, 7, and 10. Para. 10.—I consider three classes of guards ample at Rs. 7, 8, and 10, giving office peons Rs. 6 per mensem. But the pay of these subordinates must vary slightly in the different presidencies.

HEAD II.—I am under the impression that *no* subordinate should be enrolled, unless he is literate. Paras 2 and 3 are excellent ideas; something of the sort is much needed, principally to lessen the smuggling that is systematically carried on with the assistance, in most cases, of the subordinates. They would naturally think twice before committing themselves in accepting bribes, if they had to forfeit their security in addition to other penalties. In one district, I could mention, half the revenue used to be lost through smuggling, although the rates on timber were very low.

HEAD III.—Paras. 2 and 3.—The Ranger, not his subordinate Foresters, should be held responsible for the proper working of the Range. What advantages accrue in forwarding orders direct to Foresters? It appears to me a disadvantage, burdening the divisional office with additional correspondence. Would it not also tend to make Foresters and their guards disregard the Ranger's order, if he is not at liberty to control his Range entirely. The Foresters should receive the pay of their circle through the Ranger, and all orders should also pass through the Ranger's office to the Foresters. Para 4.—The Ranger should have a gumasta on Rs. 15, an office peon, and a guard, on Rs. 7, to accompany him while on his tours.

HEAD IV.—Para. 2.—Again additional work for divisional office. Why not transmit the cheque in the Ranger's name? After the money is drawn, he will distribute cash to each Forester, who will disburse the pay of the guards. Para 5.—The *locum tenens* should not be an outsider.

E. H. B.

Floating of Logs.

DEAR SIR,—Can any of your readers give their experience on the action of water in the rising and abatement of floods?

MR. MARSH, in "Earth as modified by Human Action" states:—"Many physicists, who have investigated the laws of natural hydraulics, maintain that in consequence of direct obstruction and frictional resistances to the flow of the waters of rivers along their banks, there is both an increased rapidity of current and an elevation of the water in the middle of the channel;

so that a river presents always a convex surface. Others have thought that the greater swiftness of the central current must produce a depression in that part of the stream. The lumber-men affirm that while rivers are rising, the water is highest in the middle and tends to throw floating objects shorewards; while they are falling it is lowest in the middle and floating objects incline towards the centre.

Logs, they say, rolled into the water during the rise, are very apt to lodge on the banks, while those set afloat during the falling of the waters keep in the current and are carried without hindrance to their destination; and this law, which has been a matter of familiar observation among woodmen for generations, is now admitted as a scientific truth."

Yours truly,

J. K.

Rats in Nurseries.

Several letters have lately appeared in the last two numbers of the "Indian Forester" regarding the best means for destroying rats in nurseries.

I have been greatly troubled by these creatures and have had occasion to try a few experiments for destroying them, I found the following a cheap and most effectual mode: Select two or three of the newest looking holes, into these cram in as much "boosa," or wood shaving, as you can, set fire to it, and with a pair of ordinary blacksmith's bellows blow the smoke down into the holes—in a very short time the smoke will be seen curling up all over the ground for yards off, shut up all these places, and you will have killed every rat in the place.

The grounds about the forest house at Bagham were overrun with rats which destroyed every plant I put out, after one or two applications of the lighted "boosa" and bellows I got rid of my friends.

I have watched the villagers killing rats in their melon fields and tank embankments in this manner, and they said it was the only *sure* way of getting rid of them.

F. O. LEMARCHAND.

Boxwood from Persia.

In some parts of Persia boxwood grows in abundance, particularly in the district of Tenekaboun, in the province of Mazenderun. Upwards of £27,000 worth of this wood was purchased at Rostow in 1875 by an English firm of Liverpool, and the great profits made by some individuals have induced many people to engage in this trade this year. Boxwood was formerly cut down in large quantities in the mountainous regions of the Caucasus, but disputes having arisen as to the rightful ownership of the forests, the Russian Government has within the last few years prohibited its being cut; hence it has been sought for in these provinces. It is a wood that grows very slowly, and requires much time to attain the size required for the market. It is thus probable that very few years will see the end for a time of this branch of trade in this part of Persia. Already, in Ghilan, it has become scarce; but vast forests of it are still to be found in Mazenderun. The Governor of Ghilan, with a view to making the Persian Government profit by this rising industry, has thought fit to obtain the Shah's sanction to prohibit the further cutting of this wood and loupes, without a special permission, and this measure has given rise to great dissatisfaction both amongst the owners of boxwood forests and those engaged in cutting and exporting this timber. The export of timber (walnut and boxwood) from the province of Ghilan during the year 1875 was valued at £20,000, the whole of which came to England.

The Forest of Dean.

There is a difference of opinion amongst the learned as to the origin of the word Dean, upon which it is hardly worth while here to offer any remarks; it will suffice to say that the Gloucestershire forest is of great antiquity, and that its name appears in William the Conqueror's survey, and that in A. D. 1300, mining privileges and regulations existed amongst the operatives, some of these regulations having reference to the felling of timber. Its timber seems to have been highly valued in the days of Queen Elizabeth, as Evelyn in his "Sylva" says

of it, in reference to its intended destruction by the Spanish army which the Armada intended to land, "I have heard that in the great expedition of 1588 it was expressly enjoined on the Spanish Armada, that if, when landed, they should not be able to subdue our nation and make good their conquest, they should yet be sure not to leave a tree standing in the Forest of Dean." This intended blow at the existence of the English navy shows how important the timber produced in the Forest of Dean must have been to the nation, for it must be remembered that it was only about this period that our home supplies began to run short, and that a foreign trade was commenced. Fuller, in his "Worthies," published about the same time as Evelyn's work, says of the destruction of the forest "that a Spanish ambassador was to get it done by private practices and cunning contrivances," and in the "Legacy of Husbandry" (1655), the author, speaking of the deficiency of forests at that time, says, "the State hath done very well to pull down divers iron-works in the Forest of Dean, that the timber might be preserved for shipping, which is accounted the toughest in England, and, when it is dry, as hard as iron." So alive was the Government of those days to the value of the forest for producing naval timber, that we find them directing that "twelve standils, or storers, likely to become timber, should be left on every acre of wood or underwood that was felled at or under twenty-four years' growth." Moreover no trees upwards of a foot in the square were to be converted into charcoal for making iron. In 1638 a survey showed a supply of no more than 105,557 trees, containing about 61,000 tons of timber and about 155,000 cords of wood, only half of which were fit for shipbuilding. Accordingly 16,000 or 17,000 acres were ordered to be taken in. During the Commonwealth above 40,000 trees were cut down by order of the House of Commons, and the forest was set fire to in divers places by incendiaries, to the great destruction of the young growing wood. In 1662 a fearful storm occurred, of which Pepys writes, "We have letters from the Forest of Dean that above 1,000 ashes and as many beeches are blown down." At this time the forest contained about 24,000 acres. Succeeding years, from the reign

of Charles II., record multitudes of regulations, acts, and what not, having for their ostensible object the improvement of the forest, but many of them being promoted in furtherance of private interests; and constant complaints were made of the shameful depredations that took place by persons living in the neighbourhood: for instance, for years it was the practice to steal the body of an oak during the night, and cut it into cooper's wares, leaving the top part on the spot, which the keepers took as their perquisite. Coming now to more recent times, we find that in the seasons of 1824-25, and 1825-26, about 500 acres of the High Meadow property were planted with oak, Scotch fir, and larch, in proportions varying with the nature of the soil and openness of the situation, and in 1827 the Crown sold 1,273 acres. In 1830 we have the first Annual Report of the Commissioners, giving the area of the various plantations at between 18,000 and 19,000 acres. In 1846 we are informed in the notes to the report that in that year there was the most abundant crop of Spanish chestnuts ever had, the spruce firs being "shocking bad," and many of them nearly dead. In 1848, the young oak trees, we are told, had long been suffering from caterpillar blight, the insect attacking no other tree. In 1849 Messrs. John Clinton and Robert Hall, report "that there are about 500 acres of the open forest now covered with old timber, which for the most part is very fine and of very large size, and is nearly all of very good quality. Our opinion is that a large portion of this timber is fit for naval purposes, and we suppose it to be worth £40,000. It has clearly been planted since 1667, as it is recorded that only 200 trees remained in the forest in that time. These, with the plantations thrown open, we estimate at 3,000 acres; the value of these we estimate at £100,000. The Crown has now occupied, with young and old timber, about 14,000 acres of forest." Early in the year a Select Committee of the House of Commons was appointed to inquire into the expenditure and management of the Crown Woods and Forests, and Mr. Langham, the Assistant Deputy Surveyor, stated the mode in which pit timber, and cord wood for the charcoal burner were supplied, as well as the method pursued in planting, being that of about

1,300 oaks to the acre, and the same of larch, four feet apart, and it was also stated in evidence that the forest was now fully planted. Since that time the introduction of the steam circular saw has greatly facilitated the removal of the wood, and other improvements have been introduced, which will be found in "The Forest of Dean," by the Rev. H. S. Nicholls, M.A., whose exhaustive work should be studied by all desirous of following the history of the forest in detail from the earliest to the present time. When we consider that in the reign of Henry VII. about half England was under forest, we may well be surprised that so early as the reign of Elizabeth the scarcity of wood began to be felt; but it must be remembered that this was not all owing to mismanagement, for the increasing population had no other fuel, and the growth of the navy accounts for much more. However, on many accounts, not altogether sentimental, but eminently practical, the country would not willingly see such remnants of forests as she possesses fall into decay, and it is satisfactory to know that they are well cared for, and still contribute yearly fine timber for the national use.

The Forest Conference Report.

SIR,—The Bombay Presidency, although it sent several representatives to the Simla Conference, has not received copies of the proceedings. The omission is in itself sufficiently astounding, but it is quite unaccountable when viewed in connection with the distribution of the book to foreigners. Would W. R. F. "be surprised to hear" that Oberforstrath Iudeich of Tharandt—who, by the way, does not know a word of English—has received a copy? Such are, however, the facts of the case, which it is difficult or impossible to account for except on the theory that man, or, at all events, the forest section of the Department of Agriculture, Revenue and Commerce, is an automaton without a will. There is, of course, no harm in sending the book to foreigners too, even though they should be unable to read it, but can any one doubt that this is eminently a case in which charity should begin at home.

J. B.

31*st March* 1877.

Cinchona Febrifuge, or Mixed Cinchona Alkaloid.*

THIS PREPARATION is made from the red cinchona bark grown at the Government plantations, Darjeeling, and contains all the febrifugal alkaloids of the Cinchona succirubra in the relative proportions in which they exist naturally in the bark.

Its efficacy in the treatment of fever has been carefully tested by Dr. Chevers at the Medical College Hospital, Calcutta, by Dr. Ewart at the General Hospital, by Dr. R. Bird at the Howrah Hospital, by Dr. French at Burdwan, and by a number of other experienced medical officers. The reports received clearly show that it possesses, to very nearly the same extent, the anti-periodic properties of quinine, and may be safely substituted for the latter in the treatment of ordinary fever and ague. It is issued by Government at a low price as a cheap and efficient febrifuge for the poorer classes of India; and is not intended to replace quinine in very serious and complicated cases, or among those who can afford to pay for the more expensive drug. It is to be had by application to the Superintendent of the Botanical Garden, Howrah. near Calcutta.

Price.—To the general public, Rs. 20 per pound tin; to wholesale purchasers of twenty pounds at a time, and to public officers for charitable institutions, Rs. 16-8. Postage Re. 1 per tin extra.

Administration:—It may be given in the same doses as quinine. Natives frequently prefer to swallow it in the state of powder, or to rub it up for themselves with a little *goor* or honey before taking it. It may also be conveniently made into pills with a little lime-juice. One fluid drachm of lemon-juice is sufficient to convert a drachm of the powder into a good pill-mass.

It does not mix very readily with water, but dissolves easily in some lime-juice and water.

For dispensary purposes it is convenient to prepare and keep a concentrated solution which simply requires dilution before

---

* This extract from a pamphlet sent to us by Dr. King, Superintendent Botanical Garden, Howrah, will no doubt interest our readers.—THE EDITOR.

administration. The following formula may be used for this purpose :—

Febrifuge	...	...	...	2 ounces Troy.
Acid. sulph. dil (Ph.B.)		...	...	3 fluid ounces.
Water to make	...	...	...	20 „ „

One fluid drachm contains six grains of the febrifuge, and should be diluted with at least an ounce of water before administration. The quantity of acid will dissolve perfectly all the alkaloids present, but a small portion of the colouring matter will remain insoluble. This should be disregarded, or, if preferred, it may be separated by filtering the solution ; but a larger proportion of acid should on no account be employed.

The following reports on the medicinal efficiency of this preparation, furnished by the Surgeon-General, are taken from the *Indian Annals of Medical Science* :—

Dr. Chevers.—"My practice in intermittents has, for many years, been to give quinine to adult males in full doses of 6 grains before and after every paroxysm, and in half doses of 3 grains throughout the interval.

"Having no data by which to judge the strength of the alkaloid, I made 7 grains the full dose and 4 grains the half dose. These doses of both drugs answering well, I continued them throughout the trial. In a young patient, nine years old, I gave the alkaloid in due proportion. . . . . .

"The result of my trial appears to be that the cinchona alkaloid is a very useful anti-periodic, but, as might be expected from its composition, somewhat less powerful than pure quinine. I would note the strength of quinine as being one-fourth greater than that of the alkaloid.

"I observed all the cases most carefully. I noticed nothing unpleasant or in any way to be objected to in the operation of the alkaloid. I invariably gave it in solution. The taste appears to be nearly that of quinine."

Dr. Ewart.—"The best time to be seized for its administration in intermittent fever is during some part of the sweating stage. Failing this, 10-grain doses three times a day, during the intermission, answer admirably in a large proportion of cases. In 5-grain doses, three times a day, it forms a good

bitter tonic, sharpening the appetite, improving the digestion, and expediting the completion of intestinal digestion and the primary process of assimilation. I shall endeavour to introduce it into the practice of the General Hospital, both among the in and out-door patients, as I feel convinced that a preponderating majority of cases of malarious fever will be found to be perfectly manageable under treatment with the mixed cinchona alkaloid."

Dr. Robert Bird.—"*Conclusion.*—The drug is not so easily borne by the stomach as is quinine: it cannot therefore altogether take the place of quinine. In the cure of cases of ordinary fever and ague its virtue is equal, or nearly equal, to that of quinine. In the cure of cases of suppressed fever it is superior to quinine, and judging from a limited experience, I am inclined to say, it is superior to any drug known to me. It is to be feared that its disagreeable action on the stomach excludes it from the list of useful tonics. The experiment was made on 4 cases of remittent fever, 27 of intermittent fever, 4 of supposed intermittent fever, and 4 of hemicrania,—and these were mostly all of a typical character."

Dr. French.—"The reports on these cases show clearly that the alkaloid is an anti-periodic, that in most cases it is a very good substitute for quinine, and that in some it acts just as well, and nearly as quickly, as that remedy..

"If attention be first paid to the state of the bowels, no gastric irritation follows its adminstration in small or ordinary doses. In continued or large doses it produces head symptoms like quinine. The chief of these is giddiness.

"In mild or ordinary cases the dose ought to be about 5 grains, every two or three hours during the intermission. For severe cases, doses of 10 or 15 grains every third or fourth hour act best.

List of Forest Reports and Publications for sale in the Office of the Superintendent of Government Printing, No. 8, Hastings Street, Calcutta.

*** Payments may be made direct to this Office, either by transfer receipt or by money order, or by postage stamps. In the latter case, one anna additional for every rupee's worth of stamps should be remitted to cover cost of discount in exchanging them for cash.

NAMES.	No. of copies.	PRICE.				REMARKS.
		Town.		Mofussil.		
		Rs.	A.	Rs.	A.	
Forest System of British Burma, by B. H. Baden-Powell ...	60	2	0	2	8	
Preliminary Working Plan of the Deoban Working Circle for the three years from 1875-76 to 1877-78, by D. Brandis ...	120	0	12	1	0	
Suggestions regarding Forest Administration in British Burma, by D. Brandis ...	26	0	12	1	0	
Suggestions regarding Forest Administration in the Central Provinces, by D. Brandis ...	15	0	12	1	0	
Preliminary Working Plan of the Sutlej Working Circle, for the five years from 1875-76 to 1879-80, by D. Brandis ...	80	0	12	1	0	
Memorandum on the Forest Legislation proposed for British India, by D. Brandis ...	70	1	8	1	14	
Report on the Vegetation of the Andaman Islands, by S. Kurz ...	60	1	8	1	12	
Hints on Arboriculture in the Punjab, intended for the use of District and Forest Officers, by B. Ribbentrop, 1874 ...	13	1	12	2	2	

NAMES.	No. of copies.	PRICE.		REMARKS.
		Town.	Mofussil.	
		Rs. A.	Rs. A.	
Papers relating to Establishment of a Forest Terminology in English, 1874	6	0 8	0 10	
Report on Insects destructive to Woods and Forests, by R. Thompson, 1868 ...	6	1 0	1 4	
Working-plan of the Kalatop Forest, by B. Ribbentrop, 1873 ...	20	1 8	2 2	
Report on the Cultivation of Sumach (*Rhus Coriaria*) in the vicinity of Kolli, near Palermo, by Professor Inzenga ...	10	0 8	0 10	
Working-plan of the Vhan-Khara Circle of the Changa Manga Plantation, by B. Ribbentrop ...	10	1 8	2 0	
Working-plan for the Bias Forests, by B. Ribbentrop	10	0 12	0 14	
Selections from the Records of the Government of India, Public Works Department,—No. XXXVII. Progress Report of Forest Administration in British Burma for 1861-62	41	1 12	2 0	
Selections from the Records of the Government of India, Public Works Department,—No. XL. Progress Report of Forest Administration in British Burma for 1862-63...	43	1 8	1 12	
Selections from the Records of the Government of India, Public Works Department,—No. XLVII. Progress Report of Forest Administration in the Central Provinces for 1862-63. ...	39	1 4	1 10	

NAMES.	No. of copies.	PRICE.		REMARKS.
		Town.	Mofussil.	
		Rs. A.	Rs. A.	
Reprint from the Records of the Government of India in the Public Works Department,—No. I. Progress Report of Forest Administration in the Central Provinces, for 1863-64, by Captain G. F. Pearson, Conservator of Forests, Central Provinces, with appendices...	39	1 0	1 5	
Reprint from the Records of the Government of India in the Public Works Department,—No. II. Progress Report of Forest Administration in British Burma for 1863-64, by H. Leeds, Officiating Conservator of Forests, British Burma, with appendices ...	19	1 0	1 4	
Reprint from the Records of the Government of India in the Public Works Department,—No. III. Report on the Deodar Forests of Bussahir, with appendices, and a map illustrating the situation of the forests ...	14	1 8	1 12	
Reprint from the Records of the Government of India in the Public Works Department,—No. VI. Third Annual Report on the Management and Conservancy of the Oudh Forests for the forest year ending 30th September 1864, by Captain E. S. Wood, Officiating Conservator of Forests, Oudh ...	27	1 0	1 4	

NAMES.	No. of copies.	PRICE		REMARKS.
		Town.	Mofussil.	
		Rs. A.	Rs. A.	
Reprint from the records of the Government of India in the Public Works Department,—No. VII. Progress Report of Forest Administration in British Burma for 1864-65, by H. Leeds, Officiating Conservator of Forests, British Burma ...	31	1 0	1 3	
Reports on Forest Management in Germany, Austria and Great Britain, by Captain Campbell Walker, Deputy Conservator of Forests, Madras, with extracts from reports by Mr. Gustav Mann, Mr. Ross and Mr. T. W. Webber, and a memo. by D. Brandis, Inspector-General of Forests ...	48	3 0	3 6	
Supplement to Reports on Forest Management in France, Switzerland and Lower Austria ...	10	1 0	1 6	
Preliminary Report on the Forests and other Vegetation of Pegu, by Sulpiz Kurz, Curator of the Herbarium, and Librarian Royal Botanical Garden, Calcutta ...	150	10 0	11 4	
Review by D. Brandis, Inspector-General of Forests, of the Forests Administration in the several Provinces under the Government of India for 1874-75. ...	50	0 12	1 0	
The Forest Department Code, with prescribed and suggested forms (1877)...	12	2 0	2 6	

V. Extracts from Official Gazettes and from Other Official Publications.

1.—Gazette of India.

The 14*th February* 1877.—No. 241.—His Excellency the Governor-General in Council is pleased to make the following officiating promotions in the Forest Department under the Government of India, with effect from the 13th October 1876:—

Mr. J. E. O'Callaghan, Deputy Conservator of Forests, 2nd Grade, in the North-Western Provinces, to officiate in the 1st Grade of Deputy Conservators.

Messrs. A. T. Drysdale and *G. Mann*, Deputy Conservators of Forests, 3rd Grade, in Berar and Assam, respectively, to officiate in the 2nd Grade of Deputy Conservators.

Mr. J. McKee, Assistant Conservator of Forests, 2nd Grade, in the Central Provinces, to officiate in the 1st Grade of Assistant Conservators.

The 6*th March* 1877.—No. 359.—*Mr. C. J. Ponsonby*, Deputy Conservator of Forests of the 3rd Grade in Oudh, is granted two years' furlough under Section 12 of the Civil Leave Code, wtih effect from the 14th instant, or from any subsequent date on which he may avail himself of the same.

Mr. Ponsonby is also granted subsidiary leave for thirty days.

The 12*th* 1877.—No. 386.—*Mr. A. L. Home*, Deputy Conservator of Forests, 2nd Grade, who, in Notification No. 814 of the 24th August 1876, was appointed Assistant to the Inspector General of Forests, is appointed Assistant Comptoller General, "Forests" with effect from the 1st April 1877.

Mr. J. Sykes Gamble, M.A., Assistant Conservator of Forests, 1st Grade, in Bengal, whose services have been

placed at the disposal of the Government of India, is appointed Assistant to the Inspector General of Forests as a temporary measure, *vice Mr. Home*, with effect from the 1st April 1877.

The 29th March 1877.—No. 438.—The following Officers, who were oppointed to officiate as Assistant Conservators of Forests of the 3rd Grade, in the Notification of this Department, No. 893, dated the 8th September 1876, reverted to their substantive appointments of Sub-Assistant Conservators of Forests, on the return of Officers from leave, from the dates mentioned opposite their names :—

Mr. A. Stewart (Forest Survey Branch), 7th November 1876.

Mr. C. *E. Fendall* (Punjab), 15th November 1876.

Mr. E. Dobbs, B.A. (Central Provinces), 14th December 1876.

No. 442.—*Mr. J. McKee*, Assistant Conservator of Forests, 2nd Grade, and officiating as Assistant Conservator, 1st Grade, Central Provinces, is promoted to the 1st Grade of Assistant Conservators, *vice Mr. N. Daly*, deceased, with effect from the 9th February 1877.

Mr. J. S. Mackay, Sub-Assistant Conservator of Forests, Punjab, is appointed to officiate as Assistant Conservator, 3rd Grade, from the 27th November 1876, and is promoted to the 3rd Grade of Assistant Conservators, *vice Mr. J. McKee*, with effect from the 9th February 1877.

Mr. E. A. Dobbs, B.A., Sub-Assistant Conservator of Forests, Central Provinces, is appointed to officiate as an Assistant Conservator of the 3rd Grade, *vice Mr. D. E. Hutchins*, on leave, with effect from the 9th February 1877.

The 28th April 1877.—No. 460.—*Mr. J. Sykes Gamble*, B. A., who in Notification No. 386, dated the 12th March 1877, was appointed Assistant to the Inspector General of Forests as a temporary measure, took charge of his appointment on the forenoon of the 16th instant.

The 26th April 1877.—No. 485.—*Mr. G. Stratford*, Sub-Assistant Conservator of Forests in British Burma, reported his arrival on the 16th instant from the furlough granted him in Notification No. 123, dated the 3rd February 1875, and is allowed the usual subsidiary leave under Section 24 (*b*) of the Civil Leave Code to enable him to rejoin his appointment at Rangoon.

2.—CALCUTTA GAZETTE—

The 24th April 1877.—*Mr. J. C. McDonell*, Deputy Conservator of Forests, Julpigoree Division, is allowed privilege leave for fourteen days, from the 3rd May 1877.

3.—NORTH-WESTERN PROVINCES GAZETTE—

The 30th January 1877.—No. 343.—In supersession of the orders contained in the Notification of the Revenue Department No. 4158, dated 15th November 1876, the Officiating Chief Commissioner is pleased, with the sanction of the Government of India, to promote *Mr. S. E. Wilmot*, Assistant Conservator of Forests, 3rd Grade, to the 2nd Grade, with effect from the 4th November 1876.

The 23rd February 1877.—No. 46F.—*Mr. O. Greig*, Assistant Conservator, 3rd Grade, is promoted to Assistant Conservator, 2nd Grade, with effect from this date.

The 8th March 1877.—No. 68F.—*Mr. A. Pengelly*, Officiating Deputy Conservator, 3rd Grade, and *Mr. W. Crow*, Superintendent of Nurseries, respectively made over and received charge as a temporary measure of the Ranikhet Forest Sub-division on the afternoon of the 3rd February 1877.

The 26th March 1877.—No. 1120.—*Mr. C. J. Ponsonby*, Deputy Conservator of Forest in Oudh, reported his departure on the afternoon of the 7th instant on subsidiary leave preparatory to the furlough granted him by the Government of India in the Notification of the Department of Revenue Agriculture and Commerce No. 359, of the 6th idem.

4.—PUNJAB GAZETTE—

The 29th January 1877.—No. 35F.—Transfer.—*Mr. F. D'A. Vincent,* Assistant Conservator of Forests, was transferred from the Sutlej to the Jhelum Division, and joined the latter Division on the forenoon of the 19th July 1876.

The 31st January 1877.—No. 42F.—Leave.—*Mr. W. Righy,* Assistant Conservator of Forests, rejoined the Ravi Division, Head-quarters Lahore, on return from leave on medical certificate, on the forenoon of the 2nd January 1875.

No. 43F.—Transfer.—*Mr. W. Righy,* Assistant Conservator of Forests, was transferred from the Ravi Division to the Northern Fuel Reserve Division, and assumed temporary charge of the latter Division at Jhelum, on the forenoon of the 5th January 1875.

No. 44F.—Posting.—*Mr. W. Righy,* Assistant Conservator of Forests, relinquished charge of the Northern Fuel Reserve Division on the forenoon of the 5th March 1875, and was posted to and assumed charge of the Central Office of Forest Accounts, on the forenoon of the 23rd March 1875, from *Mr. F. D'A. Vincent,* Assistant Conservator.

No. 45F.—Transfer.—*Mr. F. D'A. Vincent,* Assistant Conservator of Forests, was, on being relieved of the charge of the Central Office of Forest Accounts, transferred to the Sutlej Division, and joined that Division, on the forenoon of the 4th April 1875.

The 9th March 1877.—No. 93F.—Notification.—With reference to *Punjab Government Gazette* Notification No. 331F., dated 24th November 1876, it is hereby notified that *Mr. A. Pengelly,* Officiating Deputy Conservator of Forests, transferred from the North-Western Provinces, reported his arrival at Lahore on the 19th February 1877, and assumed charge of the Ravi Division on the afternoon of the 24th idem, from *Mr. W. G. Allan,* Deputy Conservator of Forests, transferred to the North-Western Provinces.

No. 95F.—Powers.—In pursuance of Clause V. of the Chamba Forest Lease, bearing date the 8th July 1872, His Honor the Lieutenant-Governor is pleased to invest *Mr. A. Pengelly*, Officiating Deputy Conservator of Forests, Ravi Division, with the powers of a Magistrate of the 2nd Class as defined in the Code of Criminal Procedure, to be exercised only within the limits of the Chamba State, and with reference to the trial of offences under the "Forest Rules" forming Schedule I. to the Lease aforesaid.

The 20th March 1877.—No. 112F.—Leave.—*Lieutenant-Colonel C. Batchelor*, Deputy Conservator of Forests, Sutlej Division, has obtained thirty days' subsidiary leave on full pay, with effect from the 1st April 1877, or such subsequent date as he may avail himself of the same, preparatory to proceeding on the furlough granted to him in G. G. O. No. 216, dated 9th March 1877.

5.—CENTRAL PROVINCES GAZETTE—

The 1st March 1877.—No. 713.—Three months' privilege leave of absence is granted to *Mr. A. Smythies*, Assistant Conservator of Forests, from the 23rd instant, or the subsequent date on which he may avail himself of it,

The 6th April 1877.—No. 1284.—*Mr. A. Smythies*, Assistant Conservator of Forests, availed himself on the 24th ultimo, before noon, of the three months' privilege leave granted to him by Notification No. 713, dated 1st idem.

6.—BRITISH BURMA GAZETTE—

The 29th March 1877.—No. 27.—*Mr. E. P. Popert*, Assistant Conservator of Forests, 1st Grade, is appointed to officiate as a Deputy Conservator of Forests of the 3rd Grade, with effect from the 13th October last.

The 29th March 1877.—No. 28.—*Mr. M. H. Ferrars*, B.A., Deputy Conservator of Forests, was granted privilege leave from the 20th January to the 13th March 1877.

The 3rd April 1877.—No. 63.—*Mr. Maximilian Henry Ferrars*, B.A., Deputy Conservator of Forests, 3rd Grade, is appointed to officiate as Inspector of Schools

in British Burma, with effect from the forenoon of the 14th March 1877.

7.—ASSAM GAZETTE—

The 21st February 1877.—*Mr. A. J. Mein*, Assistant-Conservator of Forests in Assam, on return from privilege leave, resumed charge of his office in the Gauhati Division on the afternoon of the 16th January 1877.

The 15th March 1877.—*Mr. W. E. D'Arcy*, Assistant Conservator of Forests, Tezpur Division, was employed on special duty in the Gauhati Forest Division, and in the Office of Direction, from the 1st of June to the 7th of November 1876.

8.—MYSORE GAZETTE—

The 2nd February 1877.—No. 137.—The privilege leave of absence for three months granted by the Chief Commissioner of Mysore in his Notification No. 227, dated the 21st September 1876, to *Mr. D. E. Hutchins*, Assistant Conservator of Forests, is commuted to leave on medical certificate for eight months with effect from the 25th September 1876.

The 28th February 1877.—*Mr. F. B. Dickenson*, Assistant Conservator of Forests, 2nd Grade, having been appointed to the charge of the Coorg Forest Range, assumed charge of the office from *Mr. H. R. Ring*, Assistant Conservator, 3rd Grade, on the afternoon of the 19th January 1877.

The 15th March 1877.—*Mr. W. King*, Assistant Conservator of Forests, assumed charge of the Nundydroog Forest Division Office on the 15th January 1877.

Mr. King officiated as Assistant Conservator of Forests, 1st Grade, from the 15th January to 9th February 1877, *vice Mr. Daly*.

The 16th April 1877.—*Mr. E. Ludlow*, Assistant Conservator of Forests, is granted three months' privilege leave from such date as he may avail himself of it.

9.—BOMBAY GAZETTE—

The 24th January 1877.—*Messrs. Narayan Anant Okidive and Narayan Ballal Oke*, Sub-Assistant Conservators of

Forests, 1st Grade, respectively delivered over and received charge of the Office of the District Forest Officer, Ahmednagar, on 13th January 1877, after office hours.

The 11th January 1877.—*Mr. C. Hewett*, Assistant Conservator, 2nd Grade, on returning from sick furlough granted to him as per *Government Gazette* dated 3rd August 1876, joined his appointment as Assistant to the District Forest Officer, Khandesh, on the 8th January 1877.

The 3rd February 1877.—*Mr. Govind Ramchandra Mahajan* to substantive *pro tem.* Sub-Assistant Conservator of Forests, 2nd Grade, *vice Mr. Narayan Anant Ohidwé*, transferred to the Baroda State, with effect from 14th January 1877.

Mr. G. Waddington, First Assistant Collector of Dharwar, is allowed privilege leave of absence for one month.

The 6th February 1877.—*Mr. Wallinger*, Deputy Conservator of Forests, 3rd Grade, is appointed to act, as a special case, as Deputy Conservator, 2nd Grade, during Captain McRae's employment as Acting Conservator of Forests in Sind.

The 28th February 1877.—*Mr. G. Norman*, Acting Collector of Poona, held the substantive appointment of Revenue and Police Commissioner, S. D., *pro tem.* from the 2nd to 27th November 1876, both days inclusive.

Mr. W. J. C. Dunbar, Assistant Conservator of Forests, resumed charge of his duties on the 7th instant, in the forenoon.

Mr. R. G. C. Westbrook has been confirmed in the appointment of Superintendent of the Timber Depôt at Karwar from the 28th June 1876.

The 12th March 1877.—*Mr. R. C. Wroughton*, Assistant Conservator of Forests, 2nd Grade, is promoted to the 1st Grade, with effect from 15th February 1877.

Mr. J. Laird to act as Deputy Conservator of Forests, 3rd Grade, during the period *Mr. Wallinger* continues to act as Deputy Conservator, 2nd Grade, or until further orders.

In the Press and will be ready on the 31st March.

BIRDS' NESTING IN INDIA.

A CALENDAR FOR EGG-COLLECTORS, AND A POPULAR GUIDE TO THE HABITS AND BREEDING SEASONS OF BIRDS.

ILLUSTRATED.

By CAPTAIN G. F. L. MARSHALL, F.E.

THIS book is designed for the use both of Egg-collectors and Sportsmen.

For Sportsmen it shows the breeding seasons of the game birds in the various parts of the country; a subject on which few people in India know much and little has as yet been published: the necessity for the PRESERVATION OF GAME is daily becoming more evident. In the absence of knowledge on this point, even Sportsmen sometimes unwittingly destroy game in the breeding season, and it is believed that any information which will enable this to be avoided will be welcomed by all.

For Egg-collectors, it gives details of the time and place at which the eggs of nearly 600 kinds of birds may

be searched for, with brief descriptions of the shape and usual position of the nests and the habits of the various kinds. The book *is arranged by months*, so that a glance at its pages will show what may be looked for at any particular time of the year; and in all cases the English name is given as well as the scientific one.

The size of the book is royal octavo; the illustrations are full-page lithographs.

The price in cloth binding is Rs. 6.

PUBLISHED BY THE

CALCUTTA CENTRAL PRESS CO.,

5, COUNCIL HOUSE STREET.

Form of Application.

TO THE MANAGER,

CALCUTTA CENTRAL PRESS CO.

5, Council House Street,

Calcutta.

SIR,

Please register my name as a Subscriber for

cop of the "BIRDS' NESTING IN INDIA," *for which*

I enclose the sum of Rupees per and*

request an acknowledgment per return of post.

Yours faithfully,

Name .....

Address .....

Date .....

** Remittances may be made per Post Office Order or in Postage Stamps. Letters containing the latter should, however, be registered.*

Publication to commence in the Autumn of 1877.

THE

GAME BIRDS OF INDIA

BY

A. O. HUME, & C. H. T. & G. F. L. MARSHALL,

WITH

COLORED ILLUSTRATIONS OF ALL THE KNOWN SPECIES.

IN THREE VOLUMES.

THE well-known "Birds of India" by the late Dr. Jerdon has been hitherto the only work available to sportsmen, which dealt with the Game Birds of India, and, though at the time of publication it was perhaps the best local Ornithological Hand-Book ever written, it is now entirely out of print, and even if available would scarcely meet the requirements of the present day. Its publication was completed in 1864; since that time many new species have been added to the Indian list, and twelve years of further observation have added much information as to the habits of birds which has not yet been made available to the public. The descriptions given by Dr. Jerdon are not unfrequently embodied in more or less technical language by no means easy to be understood by those who study Ornithology as a pastime rather than as a science; and the absence of illustrations has been a great bar to its popular utility.

The present work will supply these deficiencies and will be compiled especially to meet the requirements of sportsmen and the general public. The substance of all the latest observation will be incorporated; the written descriptions of birds will be confined to what is necessary to supplement the colored plates; and technicalities in language will be avoided as far as possible.

The habits, haunts, and nidification of each species (so far as these are yet known) will be fully noted, and the seasons that should be regarded as close in the various localities will be indicated. The English name and the generally accepted scientific name of each bird will be given, but lists of synonyms and other points interesting only to scientific naturalists will be excluded.

Every species will be figured, except, perhaps, the common Peacock, and possibly a few others with which every sportsman is familiar; the eggs also, of such species as breed within our limits, will be figured whenever the coloring is distinctive. In such groups as the Jungle Fowls, Kalij Pheasants, &c., where the eggs of the different species are all similar in coloring, the egg of one species only will be figured, while the dimensions of the eggs of the remaining species will be given. The eggs will be shown of the natural size; but in the case of the birds, the size must be regulated by the size of the plate, and in the text a few of the leading dimensions will be given to permit of identification.

The size of the Book will be Royal Octavo (10½" × 6½") identical with STRAY FEATHERS (Vol. III.) and "Shelley's Birds of Egypt." This is the smallest size compatible with clear and useful plates, and at the same time the largest suitable for general use in camp.

The Game Birds of Ceylon, Burmah, and in fact of all the provinces and sub-divisions of our Indian Empire, will be included as well as those of all the more or less Independent States embraced within the limits of our Indian Dominion.

The Book will be divided for convenience into three volumes, which will be issued at intervals of about four months. Each volume will have on an average about fifty colored plates, with their accompanying letter-press.

The first will contain the Bustards, Florican, Sandgrouse, Peafowl, Pheasants, Jungle Fowl, and Spur Fowl.

The second, the Partridges, Quails, and Rails.

The third, the Cranes, Swans, Geese, Duck, Teal, Snipe, Godwits, Woodcock, &c.

Two other volumes may perhaps be subsequently added; containing (1) the Pigeons and Doves; (2) the Plovers and Waders, which, though not actually Game Birds, often afford very excellent eating; but only the three volumes enumerated above will be put in hand at once.

The museum of Mr. A. O. Hume, containing the finest collection of Indian Birds and Eggs in the world, together with the private collections of Captains C. H. T. and G. F. L. Marshall, will supply material for most of the illustrations, and the personal observations of the authors, and of about thirty other field

naturalists in India which have been carefully collected for years by Mr. Hume, will go far to complete materials for the text. *But any further original observations by sportsmen in India which may be communicated will be thankfully acknowledged.*

The chief element of delay in bringing out the Book lies in the preparation of the plates which is necessarily a work of time, and which, it is hoped, will be shortly commenced in Europe under the personal supervision of two of the authors.

As the stones will be defaced as soon as the full number of plates have been struck off, and no second edition can be issued, it is essential to determine before-hand the number of copies that are likely to be required by the public, and intending subscribers are requested to send their names at an early date to Captain G. H. T. Marshall, Delhi; or to Captain G. F. L. Marshall, R.E., United Service Club, Calcutta.

For the convenience of subscribers in England, names may be registered in London on application to Messrs. Bernard Quaritch, 15, Piccadilly.

The price of the three volumes to subscribers will be £4-14-6 or (£1-11-6 per vol.) if paid in England, or Rs. 54 (Rs. 18 per vol.) if paid in India; but as this price may in all probability not cover actual expenses, the remaining copies after subscribers have been supplied will only be sold at an enhanced rate to be calculated when the final cost of the work is known.

Enquiries, Communications, &c., may be addressed to Captain G. F. L. Marshall, R.E., United Service Club, Calcutta.

Notes on the habits and distribution of birds for incorporation in the work, should be addressed to A. O. Hume, Esq., care of the Registrar, Department R. A. C., Calcutta.

WEST BENGAL SECRETARIAT LIBRARY